MAXIMATOR®

Maximum Pressure.

High Pressure Technology • Testing Equipment
Hydraulics • Pneumatics

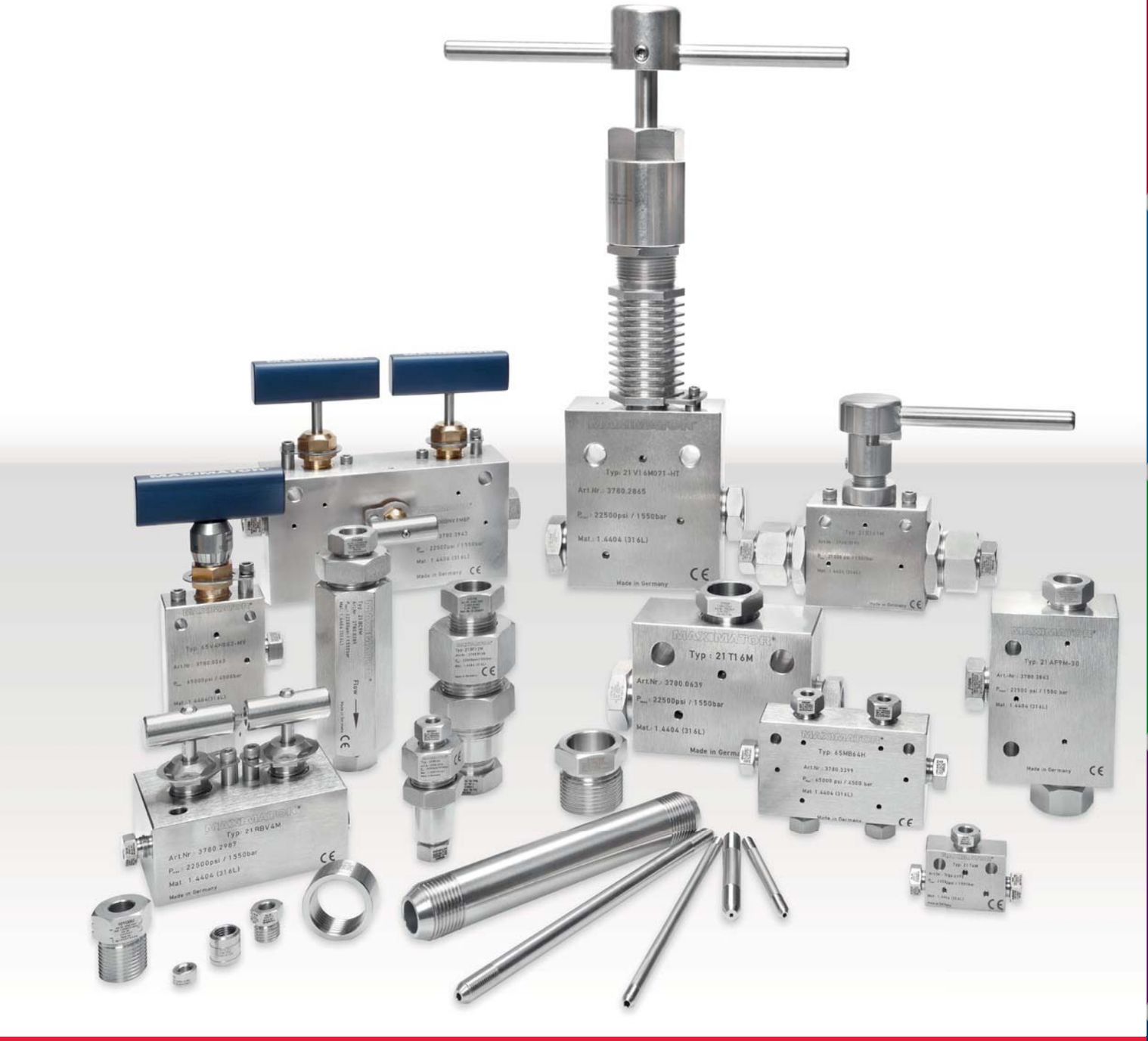

» Valves • Fittings • Tubing
up to 10.500 bar

Products for Sour Gas Applications
Pipe Valves & Fittings to 15,200 psi (1,050 bar)
Adapters and Couplings
Medium Pressure to 22,500 psi (1,550 bar)
Accessories
High Pressure to 65,000 psi (4,500 bar)
Tools
Ultra High Pressure to 152,000 psi (10,500 bar)
Technical Information
Valve Actuators
Customized Solutions
Ball Valves to 21,000 psi (1,500 bar)

Valve cross sections

Based on decades of experience in the field of high pressure technology MAXIMATOR manufactures valves and fittings for the oil and gas industry, chemical and petrochemical industry, water-jet cutting, power systems and test bench manufacture.

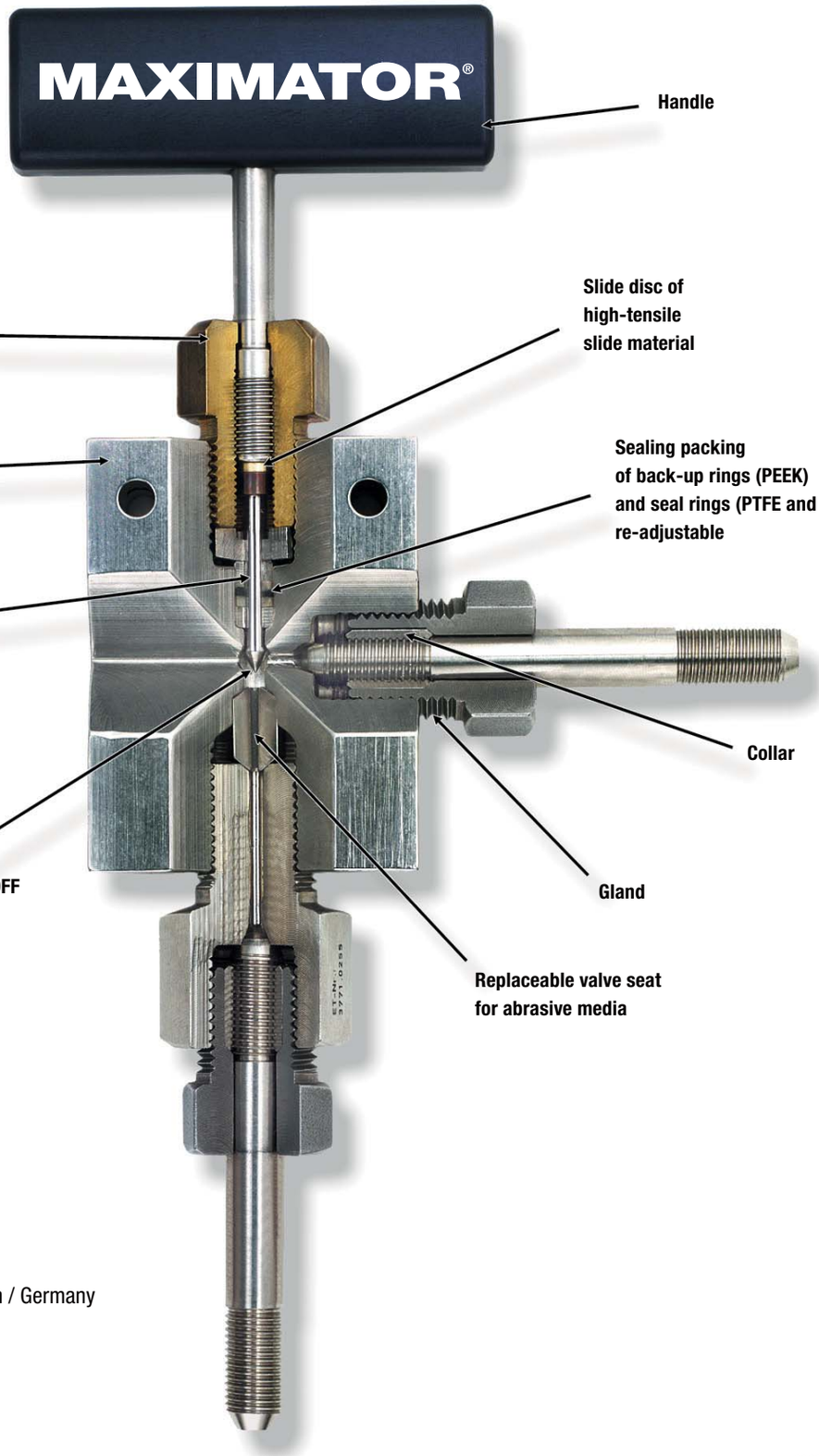

MAXIMATOR GmbH
Lange Strasse 6, 99734 Nordhausen / Germany
Telephone: +49 (0) 3631 9533 – 0,
Telefax: +49 (0) 3631 9533 – 5010
info@maximator.de
www.maximator.de

3999.1821 | 04/2017

State-of-the-art technical know-how based on German engineering, successful system developer and experienced specialist - MAXIMATOR GmbH is a leading supplier of high pressure and testing technology, hydraulic and pneumatic equipments. Qualified and motivated company members are developing, designing, manufacturing and marketing products internationally which are worldwide employed in process technology plants. At its headquarter in Nordhausen MAXIMATOR GmbH develops, designs and manufactures high pressure equipment.

In our purposefully-built development and service centre in Nordhausen MAXIMATOR offers custom-tailored services such as pressure, bursting and impulse pressure tests plus component autofrettage.

A modern manufacturing operation has been established at our Nordhausen factory. The plant complies, especially in the high-pressure area, with all requirements to ultra-clean production and thus ensures highest fabrication and quality standards.

The MAXIMATOR team is highly qualified and experienced in high-pressure technologies. Following final inspection the components are shrink wrapped which guarantee dust-free delivery to their destinations.

Our work is based on a verified and certified quality management system (DIN EN ISO 9001) - the fundamental asset for implementing technological knowledge successfully and experience in the field of complex systems.

Further sales offices of the company across Germany and partner firms around the world provide fast-tracked individual system solutions, inter alia for valves, fittings and tubings, air-driven fluid pumps, air amplifiers and gas compressors, hydraulic units, test rigs and pressure generating units as well as gas-assisted and water-assisted systems.

Our efficient in-house service department carries out erection, installation and maintenance of components and systems manufactured by MAXIMATOR.

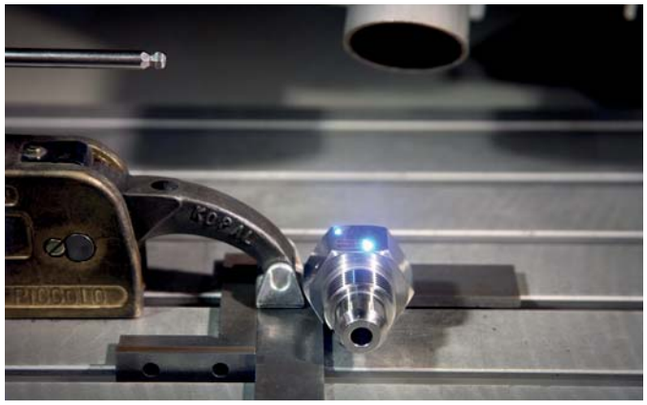

Continuous marking ensures proper traceability of all MAXIMATOR Valves and Fittings. Following product relevant datas are marked by a sophisticated laser device.

Type / Order Code / Maximum Working Pressure / ø High Pressure Tube / Material / Batch Number

Valves, Fittings and Tubing

» Table of Contents

MAXIMATOR has been designing and manufactaring high pressure equipment for more than thirty years and has a worldwide reputation for quality and reliability, backed by one of the best service organizations in the industry.

Pipe Valves and Fittings to 15,200 psi (1,050 bar)

MAXIMATOR offers a complete line of pipe fittings, pipe hex nipples, pipe check valves and pipe line filters. All pipe valves use the NPT and BSP connection, fittings use the NPT connection.

» Sizes 1/4, 3/8, 1/2, 3/4 and 1 inch NPT Connection

Medium Pressure to 22,500 psi (1,550 bar)

A complete line of medium pressure valves, fittings, tubing, check valves, line filters, angle filters, anti-vibration fittings and safety head assemblies are available through our catalog.

» Sizes 1/4, 3/8, 9/16, 3/4 and 1 inch Medium Pressure Connection

High Pressure to 65,000 psi (4,500 bar)

Whatever your high pressure needs, MAXIMATOR is the source. We supply a complete line of high pressure valves, fittings, tubing, check valves, line filters, angle filters, anti-vibration fittings and safety head assemblies.

» Sizes 1/4, 3/8 and 9/16 inch High Pressure Connection, 1“ Medium Pressure Connection (43,000 psi)

Ultra High Pressure to 152,000 psi (10,500 bar)

In addition to our medium and high pressure lines, we are proud to offer a complete line of ultra high pressure valves, fittings and tubing.

» Size 1/4, 3/8 and 9/16 High Pressure Connection (up to 101,000 psi); 5/16 inch Ultra High Pressure Connection

Valve Actuators

Piston type, air operated, valve actuators are also available from MAXIMATOR. They are mounted on a standard manual valve to provide remote control capability. There are different air to open and air to close actuators available, and selection is based on the valve size, system pressure, and air pressure available.

Ball Valves to 21,000 psi (1,500 bar)

MAXIMATOR offers ball valves of exceptional quality and performance with a variety of valve styles and process connections. Please consult the Valves, Fittings & Tubing catalog for availability.

» 2-Way Ball Valves- 1/4” up to 1/2” Orifice, 3-Way Ball Valves- 3/16” up to 1/2” Orifice, Pneumatic and Electric Actuators

Couplings and Adapters

Joining two different sizes and/or types of connections is easy with the couplings and adapters offered by MAXIMATOR. Now a variety of size combinations are possible!

Tools & Installation

Precise tools are necessary for manually coning and threading tubing. MAXIMATOR offers these tools, allowing for the coning and threading of medium and high pressure tubing up to 9/16“ O.D.

Pipe Valves and Fittings Components
Pressures to 15,200 psi (1,050 bar)
Pipe Valves, Pipe Fittings, Pipe Hex Nipples, Pipe Check Valves, Pipe Line Filters — 1

Medium Pressure Components
Pressures to 22,500 psi (1,550 bar)
Valves, Fittings, Anti-Vibration Collet Gland Assemblies, Tubing, Coned and Threaded Nipples, Check Valves, Line Filters, Angle Filters, Safety Head Assemblies, Rupture Discs — 2

High Pressure Componenents
Pressures to 65,000 psi (4,500 bar)
Valves, Fittings, Anti-Vibration Collet Gland Assemblies, Tubing, Coned and Threaded Nipples, Check Valves, Line Filters, Angle Filters, Safety Head Assemblies, Rupture Discs — 3

Ultra High Pressure Components
Pressures to 152,000 psi (10,500 bar)
Valves, Fittings, Tubing, Coned and Threaded Nipples — 4

Valve Actuators
Air to Close (normally open), Air to Open (normally closed) Actuators — 5

Ball Valves
Pressures to 21,000 psi (1,500 bar)
2-Way Ball Valves- 1/4" up to 1/2" Orifice, 3-Way Ball Valves- 3/16" up to 1/2" Orifice, Pneumatic and Electric Actuators — 6

Valves Fittings and Tubing for Sour Gas Applications
Pressures to 30,000 psi (2,070 bar)
Valves, Fittings, Anti-Vibration Collet Gland Assemblies Tubing, Coned and Threaded Nipples, Check Valves, Line Filters — 7

Adapters, Couplings
Pressures to 152,000 psi (10,500 bar)
Adapters (male to female, male to male), Couplings (female to female) — 8

Accessories
Pressure gauges, gauge connections, pressure transducer and high pressure hoses — 9

Tools & Installation
Coning and Threading Tools, Reseating and Deburring Tools, Tube Connection Details and Instructions, Tubing Minimum Bend Radius, Valve Torque Values — 10

Technical Information
Pressure vs. Temperature Chart, TÜV Certificate — 11

Customized Solutions
Gauge and Bleed Valves, Block and Bleed Valves, Manifold Blocks and other innovative solutions — 12

3999.1821 I 04/2017

Valves, Fittings and Tubing

» Catalog Part Number Generator

Pressure	Component Type	Orifice Diameter (only required on ball valves)	Connection "A" Size	Connection "A" Type
15 = 15,200 psi (1,050 bar)	**A =** Adapter (male / female)	**3** = 3/16" diameter	**2** = 1/8"	**B** = BSP Pipe
21 = 22,500 psi (1,550 bar)	**AF** = Angle Filter	**4** = 1/4" diameter	**4** = 1/4"	**P** = NPT Pipe
22 = 22,500 psi (1,550 bar)	**AVA** = Anti-Vibration Collet Gland Assembly	**6** = 3/8" diameter	**5** = 5/16"	**M** = Medium Pressure
30 = 30,000 psi (2,070 bar)	**B2** = 2-Way Ball Valve	**8** = 1/2" diameter	**6** = 3/8"	**H** = High Pressure
36 = 36,000 psi (2,500 bar)	**B3D** = 3-Way Diverter Ball Valve (90°)		**8** = 1/2"	**U** = Ultra High Pressure
43 = 43,000 psi (2,965 bar)	**BC** = Ball Check Valve		**9** = 9/16"	**GB** = Gauge BSP
65 = 65,000 psi (4,500 bar)	**BF** = Bulkhead Coupling		**12** = 3/4"	
101 = 101,000 psi (7,000 bar)	**B3S** = 3-Way Switching Ball Valve (180°)		**16** = 1"	
152 = 152,000 psi (10,500 bar)	**C** = Collar			
	CF = Cup Type Filter			
	CT = Coning Tool			
	DBBNV = Double Block and Bleed Needle Valve			
	DF = Dual Disc Line Filter			
	DT = Deburring Tool			
	F = Coupling (female / female)			
	G = Gland			
	L = Elbow			
	M = Adapter (male / male)			
	N = Nipple			
	OC = O-Ring Check Valve			
	P = Plug			
	PG = Pressure Gauge			
	RD = Rupture Disc			
	RT = Reseating Tool			
	SH = Safety Head Assembly			
	T = Tee			
	TC = Tubing Cap			
	TU = Tubing			
	TT = Threading Tool			
	UF = Union Coupling			
	V = Valve			
	X = Cross			

This Catalog Part Number Generator is to be used as a reference guide only. Use the respective catalog pages for clarification. The following examples intend to explain the use of this part number generator.

Needle Valves:

1. Standard Needle Valve for 22.500 psi with 1/4" medium pressure connection and non rotating vee stem design as two-way straight version:

   21 V 4M 07 1

2. Special Needle Valve for 30.000 psi with 1/4" high pressure connection and one piece rotating stem design as two-way straight version for Sour Gas applications:

   30 V 4H 01 1 -SOG

3. High pressure Needle Valve for 65.000 psi with 9/16" high pressure connection and non rotating vee stem design as three-way two on pressure version for high temperature applications:

   65 V 9H 07 3 -HT

4. Standard medium pressure Needle Valve for 22.500 psi with 9/16" medium pressure connection and non rotating vee stem design as two-way straight version with medium duty air actuator normally open (max. working pressure 10.000 psi - please refer to chapter 5 Valve Actuators for further information):

   21 V 9M 07 1 -YMNO

Ball Valves:

1. Medium pressure 2-way Ball Valve with 1/4" orifice diameter for 21.000 psi with 3/8" medium pressure connection:

   21 B2 4 6M

2. Medium pressure 3-way Switching Ball Valve with 3/8" orifice diameter for 15.200 psi with 1/2" BSP connection:

   15 B3S 6 8B

Stem Type (only required on needle valves)	Body Pattern (only required on needle valves)	Connection "B" Size Type	Options
00 = Vee Stem one piece rotating	**1** = Two-way straight	If different from Connection "A"	**AVA** = Anti-Vibration Collet Gland Assembly
01 = Regulating Stem one piece rotating	**2** = Two-way angle		**B** = Cryogenic Packing (-100°F)
07 = Vee Stem non rotating	**3** = Three-way, two on pressure		**DA** = Ball Valve Actuator (Pneumatic Double Acting)
08 = Regulating Stem non rotating	**4** = Three-way, one on pressure		**EA** = Electric Ball Valve Actuator (12-240 Volts AC or DC)
80 = Vee Stem one piece rotating / replaceable seat	**5** = Three-way, two stem manifold		**GY** = Graphite Braided Yarn Packing (800°F)
81 = Regulating Stem one piece rotating / replaceable seat			**HT** = High Temperature Option (1200°F)
87 = Vee Stem with replaceable seat non rotating			**LT** = Low Temperature Option (-423°F)
88 = Regulating Stema w / replaceable seat non rotating			**O2*** = Oxygen Service
			PM = Panel Mount Option for Needle Valves
			SA = Ball Valve Actuator (Pneumatic Single Acting)
			SOG = Sour Gas Service
			SSPG = Stainless Steel Packing Gland
			TG = Teflon Glass Packing (600°F)
			WO = Without Collars & Glands
			WOC = Without Coating
			YHNC = Heavy Duty Air Actuators, Normally Closed
			YHNO = Heavy Duty Air Actuators, Normally Open
			YMNC = Medium Duty Air Actuators, Normally Closed
			YMNO = Medium Duty Air Actuators, Normally Open
			2P = Two Piece Component

3. Medium pressure 3-way Diverter Ball Valve with 1/2" orifice diameter for 10.000 psi with 3/4" medium pressure connection and Electric Ball Valve Actuator (85-240 Volts AC):

   10 B3D 8 12M -EH

Adapter:

1. High pressure male to female adapter for 65.000 psi with Connection A: 9/16" high pressure male connection to Connection B: 1/4" high pressure female connection:

   65 A 9H 4H

2. High pressure male to male adapter for 30.000 psi with Connection A: 1/4" high pressure male connection to Connection B: 3/8" high pressure male connection for Sour Gas applications:

   30 M 4H 6H -SOG

   *Please consult factory

3. Medium pressure Coupling for 15.200 psi with Connection A: 3/8" medium pressure female connection to Connection B: 1/2" BSP female connection:

   15 F 6M 8B

Fittings:

1. Medium pressure Cross-Piece for 22.500 psi with 1/4" medium pressure connection including Collar and Gland:

   21 X 4M

2. High pressure T-Piece for 65.000 psi with 9/16" high pressure connection including Anti-Vibration Collet Gland Assembly:

   65 T 9H -AVA

Pipe Valves, Fittings and Nipples

» Pressures to 15,200 psi (1,050 bar)

MAXIMATOR has been designing and manufacturing high pressure equipment for more than thirty years and has a worldwide reputation for quality and reliability, backed by one of the best service organizations in the industry.

Pipe Valves, Fittings and Nipple feature:

- Rising stem design.
- 316 L (1.4404) wetted parts and 17-4 PH Stem for excellent corrosion resistance.
- Metal-to-metal seating achieves bubble-tight shut-off, longer stem and seat life, greater durability for repeated open and close cycles.
- PTFE and carbon packing with metal back-up rings offers reliable stem to body sealing.
- Non-rotating stem prevents stem to seat galling.
- Stem sleeve and packing gland materials have been selected to achieve optimum thread cycle life and reduced handle torque. All stem sleeve threads are rolled, assuring smooth operation.
- Two different valve body patterns, with choice of vee or regulating type stem tip.

MAXIMATOR offers a complete line of pipe fittings, pipe hex nipples, pipe check valves and pipe line filters. All pipe valves use the NPT and BSP connection, fitings use the NPT connection.

Note: When selecting multiple items, the pressure rating would be that of the lowest rated component.

Index	Page:
Pipe Valves	2 – 3
Pipe Fittings	4 – 7
Pipe Hex Nipples	8
Pipe O-Ring Check Valves	9
Pipe Ball Check Valves	10
Pipe Line Filters	11

MAXIMATOR GmbH, Lange Straße 6, 99734 Nordhausen, Telefon +49 (0) 3631 9533 – 0, Telefax + 49 (0) 3631 9533 – 5010, www.maximator.de, info@maximator.de

All technical and dimensional information subject to change. All general Terms and Conditions of sale, including limitations of our liability, apply to all products and services sold.

Pipe Valves

» Pressures to 15,200 psi (1,050 bar)

Pipe valves

Maximator Pipe valves with metal to metal seats have a high level of safety and reliability under adverse operating conditions. These valves may be used both with gases and liquids.

Traceability is ensured through extensively documented data (batch number, maximum pressure, material number, type designation).

Ordering Information
Typical catalog number:
15V4B071

15 V Valve Series	4B Thread Size	07 Stem Type	1 Body Pattern	Options
15 V	**4B** – 1/4” BSP	**07** – non-rotating VEE stem	**1** – two-way straight	Extreme
	4P – 1/4” NPT	**08** – non-rotating REGULATING stem*	**2** – two-way angle	temperature
	6B – 3/8” BSP			option, see
	6P – 3/8” NPT			information
	8B – 1/2” BSP			below.
	8P – 1/2” NPT			
	12B – 3/4” BSP			
	12P – 3/4” NPT			
	16B – 1” BSP			
	16P – 1” NPT			

Options for Pipe Valves

Special Designs for Extreme Temperatures
Standard valves are supplied with Teflon / Carbon packing and may be operated to 450°F **(230°C)**. High temperature packing and / or extended stuffing box are available for service from -423°F to 1200°F **(-252°C to 650°C)** by adding the following suffixes to catalog order number.

- **TG** – standard valve with teflon glass packing to 600°F **(315°C)**.
- **GY** – standard valve with graphite braided yarn packing to 800°F **(425°C)**.
- **HT** – extended stuffing box valve with graphite braided yarn packing to 1200°F **(650°C)**.
- **B** – standard valve with cryogenic trim materials and Teflon packing to -100°F **(-73°C)**.
- **LT** – extended stuffing box valve with teflon packing and cryogenic trim materials to -423°F **(-252°C)**.

O.D. Size in.	Connec-tion Type	Orifice Size in. (mm)	Rated Cv**	Pressure Rating @ R.T. psi (bar)***
1/4	4B/4P	0.201 **(5.1)**	0.75	15,200 **(1,050)**
3/8	6B/6P	0.312 **(7.9)**	1.30	15,200 **(1,050)**
1/2	8B/8P	0.312 **(7.9)**	1.30	15,200 **(1,050)**
3/4	12B/12P	0.687 **(17.4)**	5.20	15,200 **(1,050)**
1	16B/16P	0.687 **(17.4)**	5.20	15,200 **(1,050)**

Consult your MAXIMATOR representative for **repair kits** and valve bodies. Refer to the Technical Section for proper maintenance procedures.

Maximator recommends pipe connections, sealed with PTFE-Tape, be operated between 0°F (-17°C) and 450°F (230°C). By use anaerobic sealants follow the instruction of the Sealant-Manufacturer

* tapered tip for regulating and shutoff

** Cv values shown are for 2-way straight pattern vee stem valves. For 2-way angle patterns, increase the Cv value by 50%. For Flow coefficient reference curves, please refer to chapter Technical Informations.

*** See page 2 in the Technical Section for Pressure/Temperature Rating Chart.

All technical and dimensional information subject to change. All general Terms and Conditions of sale, including limitations of our liability, apply to all products and services sold.

Valve Pattern	Catalog Number	Stem Type	O.D. Tube in.	Orifice in. (mm)	Dimensions in. (mm) A	B	C	D	E	F	H	I	J	Valve Panel Hole	Block Thick-ness
2-Way Straight															
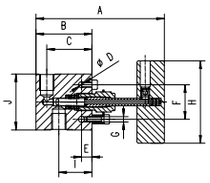	15V4B071	Vee	1/4	0.201 (5.1)	4.61 (117)	2.01 (51)	1.62 (41.1)	0.22 (5.5)	0.37 (9.5)	1.24 (31.5)	2.95 (75)	1.19 (30.2)	2.01 (51)	0.75 (19.1)	0.79 (20)
	15V4B081	Reg													
	15V4P071	Vee													
	15V4P081	Reg													
	15V6B071	Vee	3/8	0.312 (7.9)	6.3 (160)	2.88 (73.2)	2.38 (60.5)	0.37 (9.5)	0.45 (11.5)	1.38 (35)	3.94 (100)	1.75 (44.5)	2.50 (63.5)	1.00 (25.4)	1.02 (26)
	15V6B081	Reg													
	15V6P071	Vee													
	15V6P081	Reg													
	15V8B071	Vee	1/2	0.312 (7.9)	6.496 (165)	3.11 (79)	2.36 (60)	0.37 (9.5)	0.45 (11.5)	1.38 (35)	3.94 (100)	1.73 (44)	2.64 (67)	1.00 (25.4)	1.54 (39)
	15V8B081	Reg													
	15V8P071	Vee													
	15V8P081	Reg													
	15V12B071	Vee	3/4	0.687 (17.4)	9.00 (228)	4.65 (118)	3.75 (95.3)	0.53 (13.5)	1.13 (28.7)	2.50 (63.5)	10.31 (262)	2.81 (71.4)	4.13 (105)	1.62 (41.1)	1.77 (45)
	15V12B081	Reg													
	15V12P071	Vee													
	15V12P081	Reg													
	15V16B071	Vee	1	0.687 (17.4)	9.00 (228)	4.65 (118)	3.75 (95.3)	0.53 (13.5)	1.13 (28.7)	2.50 (63.5)	10.31 (262)	2.81 (71.4)	4.13 (105)	1.62 (41.1)	1.77 (45)
	15V16B081	Reg													
	15V16P071	Vee													
	15V16P081	Reg													
2-Way Angle															
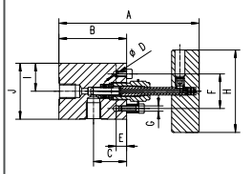	15V4B072	Vee	1/4	0.201 (5.1)	5.00 (127)	2.43 (61.7)	1.19 (30.2)	0.22 (5.5)	0.37 (9.5)	1.24 (31.5)	2.95 (75)	1.00 (25,4)	2.01 (51)	0.75 (19.1)	0.79 (20)
	15V4B082	Reg													
	15V4P072	Vee													
	15V4P082	Reg													
	15V6B072	Vee	3/8	0.312 (7.9)	6.77 (172)	3.38 (85.9)	1.75 (44.5)	0.37 (9.5)	0.45 (11.5)	1.38 (35)	3.94 (100)	1.25 (31.8)	2.50 (63.5)	1.00 (25.4)	1.02 (26)
	15V6B082	Reg													
	15V6P072	Vee													
	15V6P082	Reg													
	15V8B072	Vee	1/2	0.312 (7.9)	6.464 (164)	3.11 (79)	1.73 (44)	0.37 (9.5)	0.45 (11.5)	1.38 (35)	3.94 (100)	1.32 (33.5)	2.64 (67)	1.00 (25.4)	1.54 (39)
	15V8B082	Reg													
	15V8P072	Vee													
	15V8P082	Reg													
	15V12B072	Vee	3/4	0.687 (17.4)	9.00 (228)	4.65 (118)	2.81 (71.4)	0.53 (13.5)	1.13 (28.7)	2.50 (63.5)	10.31 (262)	2.07 (52.5)	4.13 (105)	1.62 (41.1)	1.77 (45)
	15V12B082	Reg													
	15V12P072	Vee													
	15V12P082	Reg													
	15V16B072	Vee	1	0.687 (17.4)	9.00 (228)	4.65 (118)	2.81 (71.4)	0.53 (13.5)	1.13 (28.7)	2.50 (63.5)	10.31 (262)	2.07 (52.5)	4.13 (105)	1.62 (41.1)	1.77 (45)
	15V16B082	Reg													
	15V16P072	Vee													
	15V16P082	Reg													

G - Panel mounting screw thread size 10-24 UNC (screw included). All dimensions are for reference only and are subject to change.

All technical and dimensional information subject to change. All general Terms and Conditions of sale, including limitations of our liability, apply to all products and services sold.

Pipe Fittings

» Pressures to 15,200 psi (1,050 bar)

Pipe Fittings

Maximator Pipe Fittings are designed for liquid and gas applications. The P Series Fittings are available from 1/4” to 1”NPT to 15,200 psi (1,050 bar).

NPT threads must be sealed using a high quality PTFE tape and/or paste product. Sealing performance may vary based on many factors such as pressure, temperature, media, thread quality, thread material, proper thread engagement and proper use of thread sealant.

MAXIMATOR recommends to limit the number of times an NPT fitting is assembled and disassembled because thread deformation during assembly will result in deteriorating seal quality over time. When using only PTFE tape, using thread lubrication to prevent galling of mating parts is recommended.

Fitting Pattern	Catalog Number	Connection Type	Orifice in. (mm)	Dimensions in. (mm) A	B	C	D	E	F	G	Block Thickness
Pipe Elbow											
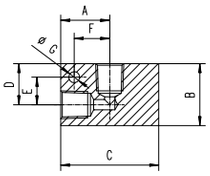	15L4P	1/4” NPT	0.201 **(5.1)**	0.75 **(19)**	1.14 **(29)**	1.54 **(39)**	0.75 **(19)**	0.49 **(12.5)**	0.49 **(12.5)**	0.22 **(5.5)**	0.79 **(20)**
	15L6P	3/8” NPT	0.312 **(7.9)**	1.00 **(25.4)**	1.50 **(38)**	2.01 **(51)**	1.00 **(25.4)**	0.63 **(16)**	0.63 **(16)**	0.26 **(6.5)**	1.02 **(26)**
	15L8P	1/2” NPT	0.312 **(7.9)**	1.50 **(38)**	1.89 **(48)**	2.99 **(76)**	1.25 **(31.8)**	0.84 **(21.3)**	1.08 **(27.5)**	0.33 **(8.5)**	1.38 **(35)**
	15L12P	3/4” NPT	0.685 **(17.4)**	1.50 **(38)**	2.24 **(57)**	2.99 **(76)**	1.50 **(38)**	1.00 **(25.4)**	1.00 **(25.4)**	0.35 **(9)**	1.38 **(35)**
	15L16P	1” NPT	0.685 **(17.4)**	2.07 **(52.5)**	2.52 **(64)**	4.13 **(105)**	1.57 **(40)**	1.10 **(28)**	1.38 **(35)**	0.53 **(13.5)**	1.77 **(45)**
Pipe Tee											
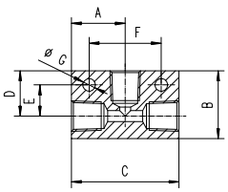	15T4P	1/4” NPT	0.201 **(5.1)**	0.77 **(19.5)**	1.14 **(29)**	1.54 **(39)**	0.75 **(19)**	0.49 **(12.5)**	1.02 **(26)**	0.22 **(5.5)**	0.79 **(20)**
	15T6P	3/8” NPT	0.312 **(7.9)**	1.00 **(25.4)**	1.50 **(38)**	2.01 **(51)**	1.00 **(25.4)**	0.63 **(16)**	1.26 **(32)**	0.26 **(6.5)**	1.02 **(26)**
	15T8P	1/2” NPT	0.312 **(7.9)**	1.50 **(38)**	1.89 **(48)**	2.99 **(76)**	1.26 **(32)**	0.87 **(22)**	2.00 **(51)**	0.35 **(9)**	1.38 **(35)**
	15T12P	3/4” NPT	0.685 **(17.4)**	1.50 **(38)**	2.20 **(56)**	2.99 **(76)**	1.50 **(38)**	1.00 **(25.4)**	2.00 **(51)**	0.35 **(9)**	1.38 **(35)**
	15PT16P	1” NPT	0.685 **(17.4)**	2.07 **(52.5)**	2.52 **(64)**	4.13 **(105)**	1.57 **(40)**	1.10 **(28)**	2.76 **(70)**	0.53 **(13.5)**	1.77 **(45)**

See page 2 in the Technical Section for pressure/temperature rating chart.
All dimensions are for reference only and are subject to change.

All technical and dimensional information subject to change. All general Terms and Conditions of sale, including limitations of our liability, apply to all products and services sold.

Fitting Pattern	Catalog Number	Connection Type	Orifice in. (mm)	Dimensions in. (mm) A	B	C	D	E	F	G	Block Thick-ness
Pipe Cross											
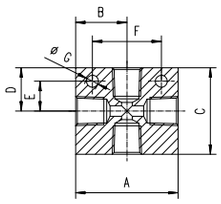	15X4P	1/4" NPT	0.201 **(5.1)**	1.54 **(39)**	0.77 **(19.5)**	1.54 **(39)**	0.77 **(19.5)**	0.49 **(12.5)**	0.98 **(25)**	0.22 **(5.5)**	0.79 **(20)**
	15X6P	3/8" NPT	0.312 **(7.9)**	2.01 **(51)**	1.00 **(25.4)**	2.01 **(51)**	1.00 **(25.4)**	0.63 **(16)**	1.26 **(32)**	0.26 **(6.5)**	1.02 **(26)**
	15X8P	1/2" NPT	0.312 **(7.9)**	2.99 **(76)**	1.50 **(38)**	2.52 **(64)**	1.26 **(32)**	0.87 **(22)**	2.01 **(51)**	0.35 **(9)**	1.38 **(35)**
	15X12P	3/4" NPT	0.685 **(17.4)**	2.99 **(76)**	1.50 **(38)**	2.99 **(76)**	1.50 **(38)**	1.00 **(25.4)**	2.01 **(51)**	0.35 **(9)**	1.38 **(35)**
	15X16P	1" NPT	0.685 **(17.4)**	4.13 **(105)**	2.07 **(52.5)**	3.15 **(80)**	1.57 **(40)**	1.10 **(28)**	2.76 **(70)**	0.53 **(13.5)**	1.77 **(45)**
Pipe Coupling											
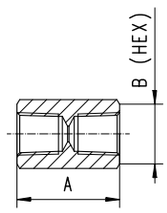	15F4P	1/4" NPT	0.201 **(5.1)**	1.50 **(38.1)**	0.81 **(20.6)**						
	15F6P	3/8" NPT	0.312 **(7.9)**	1.63 **(41.3)**	1.06 **(27)**						
	15F8P	1/2" NPT	0.312 **(7.9)**	2.05 **(52)**	1.19 **(30.2)**						
	15F12P	3/4" NPT	0.685 **(17.4)**	2.72 **(69)**	1.44 **(36.5)**						
	15F16P	1" NPT	0.685 **(17.4)**	2.52 **(64)**	2.00 **(50.8)**						
Pipe Bulkhead Coupling											
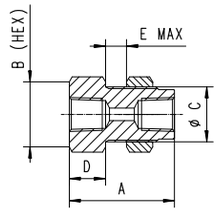	15BF4P	1/4" NPT	0.201 **(5.1)**	2.00 **(50.8)**	1.06 **(27)**	0.9 **(23)**	0.63 **(16)**	0.71 **(18)**			
	15BF6P	3/8" NPT	0.312 **(7.9)**	2.38 **(60.5)**	1.44 **(36.5)**	1.14 **(29)**	0.79 **(20)**	0.63 **(16)**			
	15BF8P	1/2" NPT	0.312 **(7.9)**	2.63 **(66.8)**	1.63 **(41.28)**	1.39 **(35.5)**	0.91 **(23)**	0.63 **(16)**			
	15BF12P	3/4" NPT	0.685 **(17.4)**	2.63 **(66.8)**	2.00 **(50.8)**	1.69 **(43)**	0.91 **(23)**	0.47 **(12)**			
	15BF16P	1" NPT	0.685 **(17.4)**	3.50 **(89)**	2.00 **(50.8)**	1.97 **(50)**	1.50 **(38)**	0.39 **(10)**			

See page 2 in the Technical Section for pressure/temperature rating chart.
All dimensions are for reference only and are subject to change.

All technical and dimensional information subject to change. All general Terms and Conditions of sale, including limitations of our liability, apply to all products and services sold.

Pipe Fittings

» Pressures to 15,200 psi (1,050 bar)

Fitting Pattern	Catalog Number	Connection Type	Orifice in. (mm)	Dimensions in. (mm) A	B	C	D	E	F	G	Block Thick-ness
Pipe Plugs											
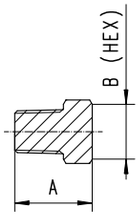	15P4P	1/4" NPT		1.10 **(28)**	0.69 **(17.5)**						
	15P6P	3/8" NPT		1.10 **(28)**	0.88 **(22.2)**						
	15P8P	1/2" NPT		1.50 **(38)**	1.06 **(27)**						
	15P12P	3/4" NPT		1.50 **(38)**	1.44 **(36,5)**						
	15P16P	1" NPT		1.89 **(48)**	1.44 **(36.5)**						
Street Pipe Elbow											
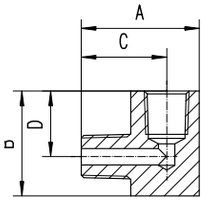	15SPL4P	1/4" NPT	0.201 **(5.1)**	1.50 **(38.1)**	1.50 **(38.1)**	1.13 **(28.7)**	1.00 **(25.4)**				0.79 **(20)**
	15SPL6P	3/8" NPT	0.312 **(7.9)**	1.76 **(44.8)**	1.50 **(38.1)**	1.25 **(31.8)**	1.00 **(25.4)**				1.02 **(26)**
	15SPL8P	1/2" NPT	0.312 **(7.9)**	2.25 **(57.2)**	2.00 **(50.8)**	1.63 **(41.4)**	1.25 **(31.8)**				1.02 **(26)**
	15SPL12P	3/4" NPT	0.685 **(17.4)**	2.5 **(63.5)**	2.62 **(66.6)**	1.81 **(46)**	1.70 **(43.3)**				1.54 **(39)**
	15SPL16P	1" NPT	0.685 **(17.4)**	2.99 **(76)**	2.99 **(76)**	2.13 **(54)**	2.01 **(51)**				1.77 **(45)**
Male Pipe Elbow											
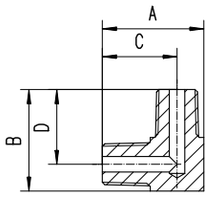	15MPL4P	1/4" NPT	0.201 **(5.1)**	1.50 **(38)**	1.50 **(38)**	1.13 **(28.7)**	1.13 **(28.7)**				0.79 **(20)**
	15MPL6P	3/8" NPT	0.312 **(7.9)**	1.75 **(60.5)**	1.75 **(36.5)**	1.25 **(29)**	1.25 **(20)**				1.02 **(26)**
	15MPL8P	1/2" NPT	0.312 **(7.9)**	2.00 **(50.8)**	2.00 **(50.8)**	1.47 **(37.4)**	1.47 **(37.4)**				1.02 **(26)**
	15MPL12P	3/4" NPT	0.685 **(17.4)**	2.62 **(66.6)**	2.62 **(66.6)**	1.87 **(47.6)**	1.87 **(47.6)**				1.54 **(39)**
	15MPL16P	1" NPT	0.685 **(17.4)**	2.99 **(76)**	2.99 **(76)**	2.13 **(54)**	2.13 **(54)**				1.77 **(45)**

See page 2 in the Technical Section for pressure/temperature rating chart.
All dimensions are for reference only and are subject to change.

All technical and dimensional information subject to change. All general Terms and Conditions of sale, including limitations of our liability, apply to all products and services sold.

Fitting Pattern	Catalog Number	Connection Type	Orifice in. (mm)	Dimensions in. (mm) A	B	C	D	E	F	G	Block Thick-ness
Male Pipe Tee											
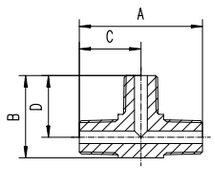	15MPT4P	1/4" NPT	0.201 **(5.1)**	2.26 **(57.4)**	1.50 **(38)**	1.13 **(28.7)**	1.13 **(28.7)**				0.79 **(20)**
	15MPT6P	3/8" NPT	0.312 **(7.9)**	2.50 **(63.5)**	1.75 **(44.5)**	1.25 **(31.8)**	1.25 **(31.8)**				1.02 **(26)**
	15MPT8P	1/2" NPT	0.312 **(7.9)**	3.00 **(76.2)**	2.00 **(50.8)**	1.50 **(38)**	1.50 **(38)**				1.02 **(26)**
	15MPT12P	3/4" NPT	0.685 **(17.4)**	3.50 **(39)**	2.62 **(66.6)**	1.75 **(44.5)**	1.77 **(44.5)**				1.54 **(39)**
	15MPT16P	1" NPT	0.685 **(17.4)**	4.13 **(105)**	2.99 **(76)**	2.07 **(52.5)**	2.13 **(54)**				1.77 **(45)**
Street Pipe Tee											
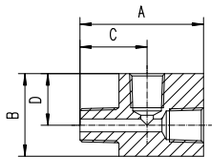	15SPT4P	1/4" NPT	0.201 **(5.1)**	2.00 **(50.8)**	1.38 **(35)**	1.15 **(29.3)**	1.00 **(25.4)**				0.79 **(20)**
	15SPT6P	3/8" NPT	0.312 **(7.9)**	2.50 **(63.5)**	1.50 **(38)**	1.50 **(38)**	1.00 **(25.4)**				1.02 **(26)**
	15SPT8P	1/2" NPT	0.312 **(7.9)**	3.00 **(76.2)**	2.00 **(50.8)**	1.63 **(41.4)**	1.25 **(31.8)**				1.38 **(35)**
	15SPT12P	3/4" NPT	0.685 **(17.4)**	3.15 **(80)**	2.62 **(66.6)**	1.81 **(46.9)**	1.70 **(43.3)**				1.54 **(39)**
	15SPT16P	1" NPT	0.685 **(17.4)**	4.13 **(105)**	2.99 **(76)**	2.13 **(54)**	2.13 **(54)**				1.77 **(45)**
Male Branch Tee											
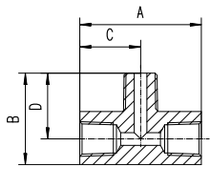	15BPT4P	1/4" NPT	0.201 **(5.1)**	2.00 **(50.8)**	1.50 **(38)**	1.00 **(25.4)**	1.13 **(28.7)**				0.79 **(20)**
	15BPT6P	3/8" NPT	0.312 **(7.9)**	2.00 **(50.8)**	1.75 **(44.5)**	1.00 **(25.4)**	1.25 **(31.8)**				1.02 **(26)**
	15BPT8P	1/2" NPT	0.312 **(7.9)**	3.00 **(76.2)**	2.25 **(57.2)**	1.50 **(38)**	1.62 **(41,2)**				1.38 **(35)**
	15BPT12P	3/4" NPT	0.685 **(17.4)**	3.00 **(76.2)**	2.62 **(66.6)**	1.50 **(38)**	1.87 **(47.6)**				1.54 **(39)**
	15BPT16P	1" NPT	0.685 **(17.4)**	4.13 **(105)**	2.99 **(76)**	2.07 **(52.5)**	2.13 **(54)**				1.77 **(45)**

See page 2 in the Technical Section for pressure/temperature rating chart.
All dimensions are for reference only and are subject to change.

All technical and dimensional information subject to change. All general Terms and Conditions of sale, including limitations of our liability, apply to all products and services sold.

Pipe Hex Nipples

» Pressures to 15,200 psi (1,050 bar)

Pipe Hex Nipples

Maximator Pipe Hex Nipples are designed for rapid system make-up. They are available in various lengths for pipe valves and fittings.

In addition to the minimum lengths (Pipe Hex Close Nipples) and standard lengths listed in the table below, Pipe Hex Nipples are also available in custom length. Please consult factory.

Fitting Pattern	Catalog Number	Connection Type psi (bar)	Working Pressure (mm)	Orifice in. (mm)	Dimensions in. (mm) A	Dimensions in. (mm) B (Hex.)
Pipe Hex Close Nipple						
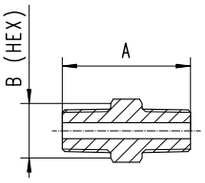	15M4P	1/4" NPT	15,200 **(1,050)**	0.201 **(5.1)**	1.85 **(47)**	0.69 **(17.46)**
	15M6P	3/8" NPT	15,200 **(1,050)**	0.312 **(7.9)**	1.89 **(48)**	0.88 **(22.2)**
	15M8P	1/2" NPT	15,200 **(1,050)**	0.312 **(7.9)**	2.50 **(63.5)**	1.06 **(27)**
	15M12P	3/4" NPT	15,200 **(1,050)**	0.685 **(17.4)**	2.81 **(71.5)**	1.44 **(36.5)**
	15M16P	1" NPT	15,200 **(1,050)**	0.685 **(17.4)**	3.19 **(81)**	1.44 **(36.5)**
Pipe Hex Nipples						
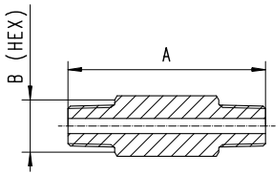	15M4P-4	1/4" NPT	15,200 **(1,050)**	0.201 **(5.1)**	4.00 **(101.6)**	0.69 **(17.46)**
	15M4P-6				6.00 **(152.4)**	
	15M4P-8				8.00 **(203,2)**	
	15M6P-4	3/8" NPT	15,200 **(1,050)**	0.312 **(7.9)**	4.00 **(101.6)**	0.88 **(22.2)**
	15M6P-6				6.00 **(152.4)**	
	15M6P-8				8.00 **(203,2)**	
	15M8P-4	1/2" NPT	15,200 **(1,050)**	0.312 **(7.9)**	4.00 **(101.6)**	1.06 **(27)**
	15M8P-6				6.00 **(152.4)**	
	15M8P-8				8.00 **(203,2)**	
	15M12P-4	3/4" NPT	15,200 **(1,050)**	0.685 **(17.4)**	4.00 **(101.6)**	1.44 **(36.5)**
	15M12P-6				6.00 **(152.4)**	
	15M12P-8				8.00 **(203,2)**	
	15M16P-4	1" NPT	15,200 **(1,050)**	0.685 **(17.4)**	4.00 **(101.6)**	1.44 **(36.5)**
	15M16P-6				6.00 **(152.4)**	
	15M16P-8				8.00 **(203,2)**	

See page 2 in the Technical Section for pressure/temperature rating chart.
All dimensions are for reference only and are subject to change.

All technical and dimensional information subject to change. All general Terms and Conditions of sale, including limitations of our liability, apply to all products and services sold.

Pipe O-Ring Check Valves

» Pressures to 15,200 psi (1,050 bar)

Pipe O-Ring Check Valves

Maximator Pipe O-Ring Check Valves provide high quality directional flow control and bubble tight shut-off for liquids and gases. These check valves are not to be used as a relief device. The opening pressure of the O-Ring Check Valves is approx. 20 psi (1.5 bar).

» Materials:
Body, cover, poppet, cover gland: 316 stainless steel
Spring: 300 series stainless steel
O-ring: FKM “A” [-4°F to 392°F (-20°C to 200°C)]

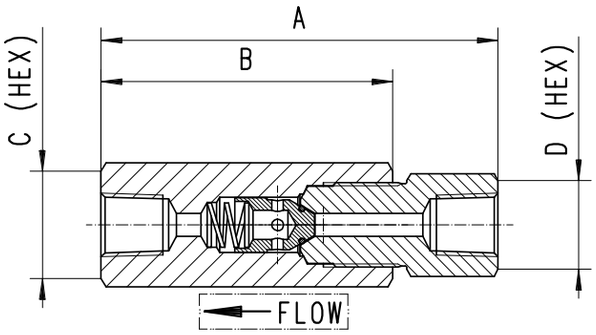

Catalog Number	Connection Type	Pressure Rating psi (bar)	Orifice in. (mm)	Rated (Cv)	Dimensions in. (mm)			
					A	B	C (Hex.)	D (Hex.)
Pipe O-Ring Check Valves								
150C4P	1/4” NPT	15,200 **(1.050)**	0.201 **(5.1)**	0.28	3.36 **(85.3)**	2.40 **(61)**	0.88 **(22.2)**	0.88 **(22.2)**
150C6P	3/8” NPT	15,200 **(1.050)**	0.312 **(7.9)**	0.84	3.94 **(100)**	2.95 **(75)**	1.44 **(36.5)**	1.44 **(36.5)**
150C8P	1/2” NPT	15,200 **(1.050)**	0.312 **(7.9)**	2.30	5.30 **(134.7)**	3.90 **(99)**	1.44 **(36.5)**	1.44 **(36.5)**
150C12P	3/4” NPT	15,200 **(1.050)**	0.685 **(17.4)**	4.70	6.25 **(159.8)**	4.88 **(124)**	2.00 **(50.8)**	2.00 **(50.8)**
150C16P	1” NPT	15,200 **(1.050)**	0.685 **(17.4)**	7.40	7.32 **(186)**	5.75 **(146)**	2.00 **(50.8)**	2.00 **(50.8)**

CAUTION: FREQUENT INSPECTIONS of O-Rings are necessary to ensure proper service of the check valve. O-Rings have shown satisfactory service life in testing, however different service conditions may lead to variations in cycle and shelf life.

All dimensions for reference only and are subject of change

All technical and dimensional information subject to change. All general Terms and Conditions of sale, including limitations of our liability, apply to all products and services sold.

Pipe Ball Check Valves

» Pressures to 15,200 psi (1,050 bar)

Pipe Ball Check Valves

Maximator Pipe Ball Check Valves prevent reverse flow where bubble tight shut-off is not mandatory. These check valves are designed to operate to 660°F (350°C). These check valves are not to be used as a relief device. The opening pressure of the Pipe Ball Check Valves is approx. 20 psi (1.5 bar).

» Materials:
Body, cover, poppet, cover gland: 316 stainless steel
Ball: 316 stainless steel
Spring: 300 series stainless steel

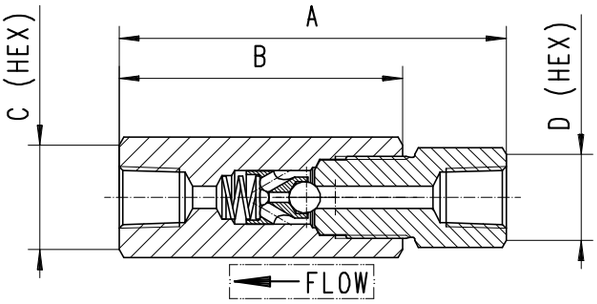

Catalog Number	Connection Type	Pressure Rating psi (bar)	Orifice in. (mm)	Rated (Cv)	Dimensions in. (mm)			
					A	B	C (Hex.)	D (Hex.)
Pipe Ball Check Valves								
15BC4P	1/4" NPT	15,200 **(1.050)**	0.201 **(5.1)**	0.28	3.36 **(85.3)**	2.40 **(61)**	0.88 **(22.2)**	0.88 **(22.2)**
15BC6P	3/8" NPT	15,200 **(1.050)**	0.312 **(7.9)**	0.84	3.94 **(100)**	2.95 **(75)**	1.44 **(36.5)**	1.44 **(36.5)**
15BC8P	1/2" NPT	15,200 **(1.050)**	0.312 **(7.9)**	2.30	5.32 **(135.7)**	3.90 **(99)**	1.44 **(36.5)**	1.44 **(36.5)**
15BC12P	3/4" NPT	15,200 **(1.050)**	0.685 **(17.4)**	4.70	6.29 **(159.8)**	4.88 **(124)**	2.00 **(50.8)**	2.00 **(50.8)**
15BC16P	1" NPT	15,200 **(1.050)**	0.685 **(17.4)**	7.40	7.32 **(186)**	5.75 **(146)**	2.00 **(50.8)**	2.00 **(50.8)**

All dimensions for reference only and are subject of change

All technical and dimensional information subject to change. All general Terms and Conditions of sale, including limitations of our liability, apply to all products and services sold.

Pipe Line Filter

» Pressures to 15,200 psi (1,050 bar)

Pipe Line Filter

Maximator Pipe Line Filters are used to filter process fluids in high pressure systems. The cup type design is used when maximum filtration surface area and a single micron size element is preferred. This design increases the filter area as much as 6 times the area of the disc type filter, and will permit higher flow rates with a lower pressure drop, and longer intervals between element changes. Filter elements come standard in 5, 30, or 56 micron sizes and are easily replaced. Filters are rated for temperatures -330˚F to 660˚F (-200°C to 350°C).

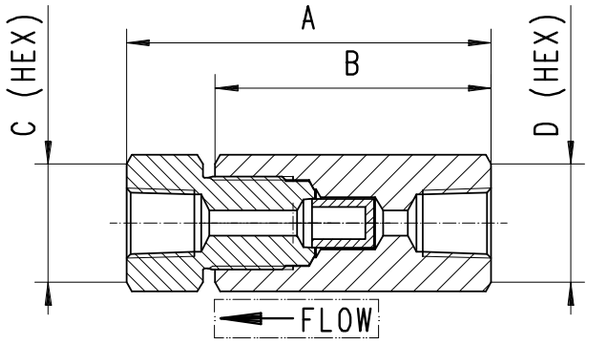

» Materials:

Body, cover, cover gland: 316 series stainless steel
Element: 300 series stainless steel

Catalog Number	Pressure Rating psi (bar)	Orifice in. (mm)	Micron Size	Connection Type	Filter Element Area in.^{2} (mm^2)	Dimensions in. (mm) A	B	C (Hex.)	D (Hex.)
Pipe Line Filter									
15CF4P-5	15,200 **(1,050)**	0.201 **(5.1)**	5	1/4" NPT	0.82 **(530)**	3.25 **(82.5)**	2.36 **(60)**	0.88 **(22.2)**	0.88 **(22.2)**
15CF4P-30			30						
15CF4P-56			56						
15CF6P-5	15,200 **(1,050)**	0.312 **(7.9)**	5	3/8" NPT	1.55 **(1,000)**	3.69 **(93.84)**	2.83 **(72)**	1.19 **(30.2)**	1.44 **(36.5)**
15CF6P-30			30						
15CF6P-56			56						
15CF8P-5	15,200 **(1,050)**	0.312 **(7.9)**	5	1/2" NPT	1.55 **(1,000)**	4.42 **(112.4)**	3.35 **(85)**	1.44 **(36.5)**	1.44 **(36.5)**
15CF8P-30			30						
15CF8P-56			56						
15CF12P-5	15,200 **(1,050)**	0.685 **(17.4)**	5	3/4" NPT	6.14 **(3,690)**	6.57 **(66.94)**	5.12 **(130)**	2.00 **(50.8)**	2.00 **(50.8)**
15CF12P-30			30						
15CF12P-56			56						
15CF16P-5	15,200 **(1,050)**	0.685 **(17.4)**	5	1" NPT	6.14 **(3.690)**	6.77 **(171.9)**	5.31 **(135)**	2.00 **(50.8)**	2.00 **(50.8)**
15CF16P-30			30						
15CF16P-56			56						

It is recommended that all fluids entering a high pressure system be thoroughly cleaned.
Maximator filters are designed to remove small amounts of process particles. Pressure differential should not exceed 1000 psi across the filter elements.

All dimensions for reference only and are subject of change

All technical and dimensional information subject to change. All general Terms and Conditions of sale, including limitations of our liability, apply to all products and services sold.

Medium Pressure Valves, Fittings and Tubing

» Pressures to 22,500 psi (1,550 bar)

MAXIMATOR has been designing and manufacturing high pressure equipment for more than thirty years and has a worldwide reputation for quality and reliability, backed by one of the best service organizations in the industry.

Medium Pressure Valves feature:

- Rising stem design.
- 316 L (1.4404) wetted parts and 17-4 PH Stem for excellent corrosion resistance.
- Metal-to-metal seating achieves bubble-tight shut-off, longer stem and seat life, greater durability for repeated open and close cycles.
- PTFE and carbon packing with metal back-up rings offers reliable stem to body sealing.
- Non-rotating stem prevents stem to seat galling.
- Stem sleeve and packing gland materials have been selected to achieve optimum thread cycle life and reduced handle torque. All stem sleeve threads are rolled, assuring smooth operation.
- Safety weep holes for all pressure connections and packing area.
- Six different valve body patterns, with choice of vee or regulating type stem tip.

MAXIMATOR offers a complete line of medium pressure valves, fittings, tubing, check valves, line filters, anti-vibration fittings and safety head assemblies. All medium pressure valves and fittings use the medium pressure style connection. This coned and threaded connection features orifice sizes to match the high flow characteristics of the medium pressure valve, fittings and tubing line.

Note: When selecting multiple items, the pressure rating would be that of the lowest rated component.

Medium Pressure Index	Page:
Valves	2 – 4
Double Block and Bleed Needle Valves	5
Fittings	6 – 7
Anti-Vibration Collet Gland Assemblies	8
Check Valves	9 – 10
Line Filters	11
Angle Filters	12
Safety Head Assemblies and Rupture Discs	13 – 14
Relief Valves	15
Tubing	16
Coned and Threaded Nipples	17

MAXIMATOR GmbH, Lange Straße 6, 99734 Nordhausen, Telefon +49 (0) 3631 9533 – 0, Telefax + 49 (0) 3631 9533 – 5010, www.maximator.de, info@maximator.de

All technical and dimensional information subject to change. All general Terms and Conditions of sale, including limitations of our liability, apply to all products and services sold.

Medium Pressure Valves

» Pressures to 22,500 psi (1,550 bar)

Medium pressure valves

Maximator Medium pressure valves with metal to metal seats have a high level of safety and reliability under adverse operating conditions. These valves may be used both with gases and liquids.

Traceability is ensured through extensively documented data (batch number, maximum pressure, material number, type designation). All medium pressure valves include glands and collars.

Ordering Information
Typical catalog number: 21V4M071

21 V Valve Series	4M O.D. Tube Size	07 Stem Type	1 Body Pattern	Options
21 V	**4M** – 1/4”	**07** – VEE stem	**1** – two-way straight	Extreme
	6M – 3/8”	**08** – REGULATING stem*	**2** – two-way angle	temperature
	9M – 9/16”	**87** – VEE stem with replaceable seat	**3** – three-way, two on pressure	option, see
	12M – 3/4”	**88 –** REGULATING stem with replaceable seat*	**4** – three-way, one on pressure	information
	16M – 1”		**5** – three-way, two-stem manifold	below.

Options for Medium pressure valves

Special Designs for Extreme Temperatures
Standard valves are supplied with Teflon / Carbon packing and may be operated to 450°F **(230°C)**. High temperature packing and / or extended stuffing box are available for service from -423°F to 1200°F **(-252°C to 650°C)** by adding the following suffixes to catalog order number.

- **TG** – standard valve with teflon glass packing to 600°F **(315°C)**.
- **GY** – standard valve with graphite braided yarn packing to 800°F **(425°C)**.
- **HT** – extended stuffing box valve with graphite braided yarn packing to 1200°F **(650°C)**.
- **B** – standard valve with cryogenic trim materials and Teflon packing to -100°F **(-73°C)**.
- **LT** – extended stuffing box valve with teflon packing and cryogenic trim materials to -423°F **(-252°C)**.

O.D. Size in. (mm)	Connection Type	Orifice Size in. (mm)	Rated Cv**	Pressure Rating @ R.T. psi (bar)***
1/4 **(6.35)**	4MF	0.125 **(3.2)**	0.31	22,500 **(1,550)**
3/8 **(9.53)**	6MF	0.219 **(5.6)**	0.75	22,500 **(1,550)**
9/16 **(14.29)**	9MF	0.312 **(7.9)**	1.30	22,500 **(1,550)**
3/4 **(19.05)**	12MF	0.438 **(11.1)**	2.50	22,500 **(1,550)**
1 **(25.4)**	16MF	0.562 **(14.3)**	4.40	22,500 **(1,550)**

Consult your MAXIMATOR representative for **repair kits** and valve bodies. Refer to the Tools and Installation section for proper maintenance procedures.

* tapered tip for regulating and shut-off

** Cv values shown are for 2-way straight pattern vee stem valves. For 2-way angle patterns, increase the Cv value by 50%. For Flow coefficient reference curves, please refer to chapter Technical Informations.

*** See page 2 in the Technical Section for Pressure/Temperature Rating Chart.

All technical and dimensional information subject to change. All general Terms and Conditions of sale, including limitations of our liability, apply to all products and services sold.

Valve Pattern	Catalog Number	Stem Type	O.D. Tube in.	Orifice in. (mm)	Dimensions in. (mm) A	B	C	D	E	F	H	I	J	K	Valve Panel Hole	Block Thick-ness
2-Way Straight																
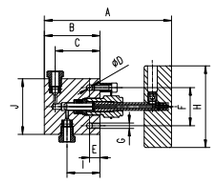	21V4M071	Vee	1/4	0.106 (2.7)	4.61 (117)	2.01 (51)	1.62 (41.1)	0.22 (5.6)	0.37 (9.5)	1.24 (31.5)	2.95 (75)	1.19 (30.2)	2.01 (51)		0.75 (19.1)	0.79 (20.1)
	21V4M081	Reg														
	21V6M071	Vee	3/8	0.201 (5.1)	4.61 (117)	2.01 (51)	1.62 (41.1)	0.22 (5.6)	0.37 (9.5)	1.24 (31.5)	2.95 (75)	1.19 (30.2)	2.01 (51)		0.75 (19.1)	0.79 (20.1)
	21V6M081	Reg														
	21V9M071	Vee	9/16	0.307 (7.8)	5.87 (149)	2.88 (73.2)	2.38 (60.5)	0.37 (9.5)	0.45 (11.5)	1.38 (35)	3.94 (100)	1.75 (44.5)	2.50 (63.5)		1.00 (25.4)	1.02 (25.9)
	21V9M081	Reg														
	21V12M071	Vee	3/4	0.438 (11.1)	7.05 (179)	3.74 (95)	3.00 (76)	0.43 (11)	0.63 (16)	1.76 (44.7)	10.31 (262)	2.25 (57.2)	3.00 (76)		1.25 (31.8)	1.38 (35)
	21V12M081	Reg														
	21V16M071	Vee	1	0.562 (14.3)	8.98 (228)	4.65 (118)	3.75 (95.3)	0.53 (13.5)	1.13 (28.7)	2.50 (63.5)	10.31 (262)	2.81 (71.4)	4.13 (105)		1.62 (41.1)	1.77 (45)
	21V16M081	Reg														
2-Way Angle																
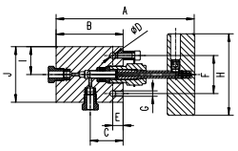	21V4M072	Vee	1/4	0.106 (2.7)	5.00 (127)	2.43 (61.7)	1.19 (30.2)	0.22 (5.6)	0.37 (9.5)	1.24 (31.5)	2.95 (75)	1.00 (25.4)	2.01 (51)		0.75 (19.1)	0.79 (20.1)
	21V4M082	Reg														
	21V6M072	Vee	3/8	0.201 (5.1)	5.00 (127)	2.43 (61.7)	1.19 (30.2)	0.22 (5.6)	0.37 (9.5)	1.24 (31.5)	2.95 (75)	1.00 (25.4)	2.01 (51)		0.75 (19.1)	0.79 (20.1)
	21V6M082	Reg														
	21V9M072	Vee	9/16	0.307 (7.8)	6.36 (161.5)	3.38 (85.9)	1.75 (44.5)	0.37 (9.5)	0.45 (11.5)	1.38 (35)	3.94 (100)	1.25 (31.8)	2.50 (63.5)		1.00 (25.4)	1.02 (25.9)
	21V9M082	Reg														
	21V12M072	Vee	3/4	0.438 (11.1)	7.56 (192)	4.25 (108)	2.25 (57.2)	0.43 (11)	0.63 (16)	1.76 (44.7)	10.31 (262)	1.50 (38)	3.00 (76)		1.25 (31.8)	1.38 (35)
	21V12M082	Reg														
	21V16M072	Vee	1	0.562 (14.3)	9.45 (240)	5.12 (130)	2.81 (71.4)	0.53 (13.5)	1.13 (28.7)	2.50 (63.5)	10.31 (262)	2.07 (52.5)	4.13 (105)		1.62 (41.1)	1.77 (45)
	21V16M082	Reg														
3-Way / 2 on Pressure																
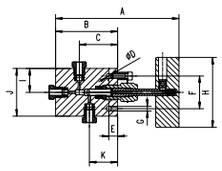	21V4M073	Vee	1/4	0.106 (2.7)	5.20 (132)	2.62 (66.5)	1.62 (41.1)	0.22 (5.6)	0.37 (9.5)	1.24 (31.5)	2.95 (75)	1.00 (25.4)	2.01 (51)	1.19 (30.2)	0.75 (19.1)	0.79 (20.1)
	21V4M083	Reg														
	21V6M073	Vee	3/8	0.201 (5.1)	5.20 (132)	2.62 (66.5)	1.62 (41.1)	0.22 (5.6)	0.37 (9.5)	1.24 (31.5)	2.95 (75)	1.00 (25.4)	2.01 (51)	1.19 (30.2)	0.75 (19.1)	0.79 (20.1)
	21V6M083	Reg														
	21V9M073	Vee	9/16	0.307 (7.8)	6.60 (167.6)	3.62 (92)	2.38 (60.5)	0.37 (9.5)	0.45 (11.5)	1.38 (35)	3.94 (100)	1.25 (31.8)	2.50 (63.5)	1.75 (44.5)	1.00 (25.4)	1.02 (25.9)
	21V9M083	Reg														
	21V12M073	Vee	3/4	0.438 (11.1)	7.97 (201)	4.63 (117.5)	3.00 (76)	0.43 (11)	0.63 (16)	1.76 (44.7)	10.31 (262)	1.50 (38)	3.00 (76)	2.25 (57.2)	1.25 (31.8)	1.38 (35)
	21V12M083	Reg														
	21V16M073	Vee	1	0.562 (14.3)	10.20 (259)	5.87 (149)	3.75 (95.3)	0.53 (13.5)	1.13 (28.7)	2.50 (63.5)	10.31 (262)	2.07 (52.5)	4.13 (105)	2.81 (71.4)	1.62 (41.1)	1.77 (45)
	21V16M083	Reg														

G - Panel mounting screw thread size 10-24 UNC (screw included). All dimensions are for reference only and are subject to change.

All technical and dimensional information subject to change. All general Terms and Conditions of sale, including limitations of our liability, apply to all products and services sold.

Medium Pressure Valves

» Pressures to 22,500 psi (1,550 bar)

Valve Pattern	Catalog Number	Stem Type	O.D. Tube in.	Orifice in. (mm)	Dimensions in. (mm) A	B	C	D	E	F	H	I	J	K	Valve Panel Hole	Block Thick-ness
3-Way / 1 on Pressure																
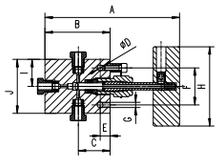	21V4M074	Vee	1/4	0.106 (2.7)	5.00 (127)	2.43 (61.7)	1.19 (30.2)	0.22 (5.6)	0.37 (9.5)	1.24 (31.5)	2.95 (75)	1.00 (25.4)	2.01 (51)		0.75 (19.1)	0.79 (20.1)
	21V4M084	Reg														
	21V6M074	Vee	3/8	0.201 (5.1)	5.00 (127)	2.43 (61.7)	1.19 (30.2)	0.22 (5.6)	0.37 (9.5)	1.24 (31.5)	2.95 (75)	1.00 (25.4)	2.01 (51)		0.75 (19.1)	0.79 (20.1)
	21V6M084	Reg														
	21V9M074	Vee	9/16	0.307 (7.8)	6.34 (161)	3.38 (85.9)	1.75 (44.5)	0.37 (9.5)	0.45 (11.5)	1.38 (35)	3.94 (100)	1.25 (31.8)	2.50 (63.5)		1.00 (25.4)	1.02 (25.9)
	21V9M084	Reg														
	21V12M074	Vee	3/4	0.438 (11.1)	7.56 (192)	4.25 (108)	2.25 (57.2)	0.43 (11)	0.63 (16)	1.76 (44.7)	10.31 (262)	1.50 (38)	3.00 (76)		1.25 (31.8)	1.38 (35)
	21V12M084	Reg														
	21V16M074	Vee	1	0.562 (14.3)	9.53 (242)	5.20 (132)	2.81 (71.4)	0.53 (13.5)	1.13 (28.7)	2.50 (63.5)	10.31 (262)	2.07 (52.5)	4.13 (105)		1.62 (41.1)	1.77 (45)
	21V16M084	Reg														
3-Way / 2-Stem Manifold																
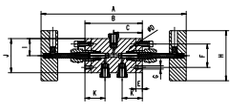	21V4M075	Vee	1/4	0.106 (2.7)	8.54 (217)	3.39 (86)	1.19 (43)	0.22 (5.6)	0.37 (9.5)	1.24 (31.5)	2.95 (75)	1.00 (25.4)	2.01 (51)	1.19 (30.2)	0.75 (19.1)	0.79 (20.1)
	21V4M085	Reg														
	21V6M075	Vee	3/8	0.201 (5.1)	8.54 (217)	3.39 (86)	1.19 (43)	0.22 (5.6)	0.37 (9.5)	1.24 (31.5)	2.95 (75)	1.00 (25.4)	2.01 (51)	1.19 (30.2)	0.75 (19.1)	0.79 (20.1)
	21V6M085	Reg														
	21V9M075	Vee	9/16	0.307 (7.8)	11.1 (282)	5.12 (130)	2.56 (65)	0.37 (9.5)	0.45 (11.5)	1.38 (35)	3.94 (100)	1.25 (31.8)	2.50 (63.5)	1.75 (44.5)	1.00 (25.4)	1.02 (25.9)
	21V9M085	Reg														
	21V12M075	Vee	3/4	0.438 (11.1)	13.07 (332)	6.50 (165)	3.25 (82.5)	0.43 (11)	0.63 (16)	1.76 (44.7)	10.31 (262)	1.50 (38)	3.00 (76)	2.25 (57.2)	1.25 (31.8)	1.38 (35)
	21V12M085	Reg														
	21V16M075	Vee	1	0.562 (14.3)	16.18 (411)	7.52 (191)	3.76 (95.5)	0.53 (13.5)	1.13 (28.7)	2.50 (63.5)	10.31 (262)	2.07 (52.5)	4.13 (105)	2.81 (71.4)	1.62 (41.1)	1.77 (45)
	21V16M085	Reg														
2-Way Angle / Replaceable Seat																
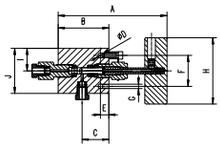	21V4M872	Vee	1/4	0.106 (2.7)	4.84 (123)	2.25 (57.2)	1.19 (30.2)	0.22 (5.6)	0.37 (9.5)	1.24 (31.5)	2.95 (75)	1.00 (25.4)	2.01 (51)		0.75 (19.1)	0.79 (20.1)
	21V4M882	Reg														
	21V6M872	Vee	3/8	0.201 (5.1)	4.84 (123)	2.25 (57.2)	1.19 (30.2)	0.22 (5.6)	0.37 (9.5)	1.24 (31.5)	2.95 (75)	1.00 (25.4)	2.01 (51)		0.75 (19.1)	0.79 (20.1)
	21V6M882	Reg														
	21V9M872	Vee	9/16	0.307 (7.8)	6.65 (169)	3.21 (81.5)	1.75 (44.5)	0.37 (9.5)	0.45 (11.5)	1.38 (35)	3.94 (100)	1.25 (31.8)	2.50 (63.5)		1.00 (25.4)	1.02 (25.9)
	21V9M882	Reg														
	21V12M872	Vee	3/4	0.438 (11.1)	7.56 (192)	4.25 (108)	2.25 (57.2)	0.43 (11)	0.63 (16)	1.76 (44.7)	10.31 (262)	1.50 (38)	3.00 (76)		1.25 (31.8)	1.38 (35)
	21V12M882	Reg														
	21V16M872	Vee	1	0.562 (14.3)	9.57 (243)	5.25 (133.3)	2.81 (71.4)	0.53 (13.5)	1.13 (28.7)	2.50 (63.5)	10.31 (262)	2.07 (52.5)	4.13 (105)		1.62 (41.1)	1.77 (45)
	21V16M882	Reg														

G - Panel mounting screw thread size 10-24 UNC (screw included). All dimensions are for reference only and are subject to change.

All technical and dimensional information subject to change. All general Terms and Conditions of sale, including limitations of our liability, apply to all products and services sold.

Double Block and Bleed Needle Valves

» Pressures to 22,500 psi (1,550 bar)

Double Block and Bleed Needle Valves

Maximator series DBBNV Double Block and Bleed Needle Valves with metal to metal seats have a high level of safety and reliability under adverse operating conditions. Double Block and Bleed Needle Valves are three stem manifold valves designed for blocking and bleeding in test and pressure monitoring applications as well as for chemical injection or drain line isolation up to 22,500 psi **(1,550 bar).**

Due to the standard valve packing and Vee stem design, Maximator double block and bleed needle valves are very compact and easy to use. In addition, manifold style valves reduce the number of fittings and space required for installation.

Ordering Information
Typical catalog number:
21DBBNV4M4P

21 DBBNV Valve Series	4M Connection	4P Vent Connection
21 DBBNV	**4M** – 1/4”	**4P** – 1/4“ NPT
	6M – 3/8”	**6P** – 3/8“ NPT
	9M – 9/16”	**8P** – 1/2“NPT
	9H – 9/16”	**4M –** 1/4“

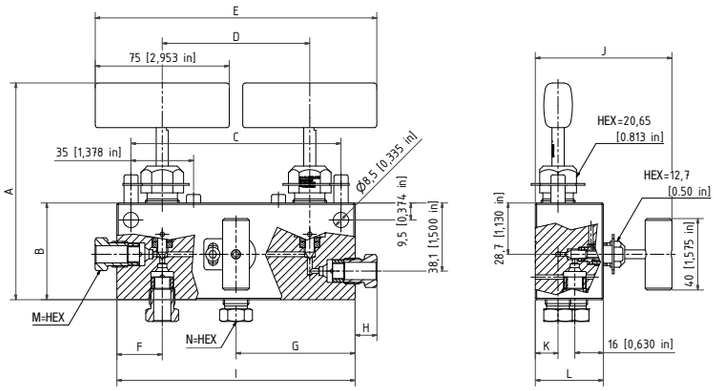

Catalog Number	Stem Type	O.D. Tube in.	Orifice in. (mm)	Dimensions in. (mm)													
				A	B	C	D	E	F	G	H	I	J	K	L	M	N
21DBBNV4M	Vee	1/4	0.11 **(2.7)**	4.882 **(124)**	2.13 **(54.1)**	4.63 **(117.6)**	3.252 **(82.6)**	6.205 **(157.6)**	1.00 **(25.4)**	2.626 **(66.7)**	0.378 **(9.6)**	5.252 **(133.4)**	3.012 **(76.5)**	0.50 **(12.7)**	1.50 **(38.1)**	0.50 **(12.7)**	0.50 **(12.7)**
21DBBNV4M4P	Vee	1/4	0.11 **(2.7)**	4.882 **(124)**	2.13 **(54.1)**	4.63 **(117.6)**	3.252 **(82.6)**	6.205 **(157.6)**	1.00 **(25.4)**	2.626 **(66.7)**	0.378 **(9.6)**	5.252 **(133.4)**	3.012 **(76.5)**	0.50 **(12.7)**	1.50 **(38.1)**	0.50 **(12.7)**	
21DBBNV6M	Vee	3/8	0.11 **(2.7)**	4.776 **(121.3)**	2.13 **(54.1)**	4.63 **(117.6)**	3.252 **(82.6)**	6.205 **(157.6)**	1.00 **(25.4)**	2.626 **(66.7)**	0.48 **(12.2)**	5.252 **(133.4)**	3.012 **(76.5)**	0.50 **(12.7)**	1.50 **(38.1)**	0.625 **(15.88)**	0.625 **(15.88)**
21DBBNV6M6P	Vee	3/8	0.11 **(2.7)**	4.776 **(121.3)**	2.13 **(54.1)**	4.63 **(117.6)**	3.252 **(82.6)**	6.205 **(157.6)**	1.00 **(25.4)**	2.626 **(66.7)**	0.48 **(12.2)**	5.252 **(133.4)**	3.012 **(76.5)**	0.50 **(12.7)**	1.50 **(38.1)**	0.625 **(15.88)**	
21DBBNV9M	Vee	9/16	0.11 **(2.7)**	5.646 **(143.4)**	3.00 **(76.2)**	4.638 **(117.8)**	3.26 **(82.8)**	6.213 **(157.8)**	1.311 **(33.3)**	2.941 **(74.7)**	0.63 **(16)**	5.882 **(149.4)**	3.283 **(83.4)**	0.752 **(19.1)**	1.772 **(45)**	0.937 **(23.8)**	0.937 **(23.8)**
21DBBNV9M8P	Vee	9/16	0.11 **(2.7)**	5.646 **(143.4)**	3.00 **(76.2)**	4.638 **(117.8)**	3.26 **(82.8)**	6.213 **(157.8)**	1.311 **(33.3)**	2.941 **(74.7)**	0.63 **(16)**	5.882 **(149.4)**	3.283 **(83.4)**	0.752 **(19.1)**	1.772 **(45)**	0.937 **(23.8)**	
21DBBNV9H4M	Vee	9/16	0.11 **(2.7)**	5.646 **(143.4)**	3.00 **(76.2)**	4.638 **(117.8)**	3.26 **(82.8)**	6.213 **(157.8)**	1.311 **(33.3)**	2.941 **(74.7)**	0.941 **(23.9)**	5.882 **(149.4)**	3.283 **(83.4)**	0.752 **(19.1)**	1.772 **(45)**	1.187 **(30.16)**	0.50 **(12.7)**

Panel mounting screw thread size 10-24 UNC (screw included).
A - Stem in closed position.
All dimensions are for reference only and are subject to change.

All technical and dimensional information subject to change. All general Terms and Conditions of sale, including limitations of our liability, apply to all products and services sold.

Medium Pressure Fittings

» Pressures to 22,500 psi (1,550 bar)

Medium pressure fittings

Maximator medium pressure fittings are designed with the large orifice for use with the 21V series medium pressure valves and medium pressure tubing. All medium pressure fittings have coned and threaded type connections. Mounting holes are standard on all elbows, tees and crosses.

Tubing Size in. (mm)	Gland	Collar	Plug	Tubing Cap
1/4 **(6.35)**	21G4M	21C4M	21P4M	21TC4M
3/8 **(9.53)**	21G6M	21C6M	21P6M	21TC6M
9/16 **(14.29)**	21G9M	21C9M	21P9M	21TC9M
3/4 **(19.05)**	21G12M	21C12M	21P12M	21TC12M
1 **(25.4)**	21G16M	21C16M	21P16M	21TC16M

Connection Components

All medium pressure fittings are supplied with glands and collars. Refer to the adjacent chart for ordering any of the connection components individually. When using the plug, the collar is not needed.

Fitting Pattern	Catalog Number	Connection Type in.	O.D. Tube (mm)	Orifice in.	Dimensions in. (mm) A	B	C	D	E	F	G	Block Thick-ness
Elbow												
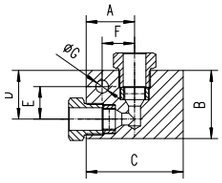	21L4M	4MF	1/4	0.106 **(2.7)**	0.75 **(19.1)**	1.10 **(28)**	1.54 **(39.1)**	0.75 **(19.1)**	0.49 **(12.5)**	0.49 **(12.5)**	0.22 **(5.6)**	0.63 **(16)**
	21L6M	6MF	3/8	0.201 **(5.1)**	1.00 **(25.4)**	1.38 **(35)**	2.00 **(50.8)**	1.00 **(25.4)**	0.63 **(16)**	0.63 **(16)**	0.26 **(6.6)**	0.79 **(20.1)**
	21L9M	9MF	9/16	0.307 **(7.8)**	1.25 **(31.8)**	1.75 **(44.5)**	2.50 **(63.5)**	1.25 **(31.8)**	0.84 **(21.3)**	0.84 **(21.3)**	0.33 **(8.4)**	1.02 **(25.9)**
	21L12M	12MF	3/4	0.438 **(11.1)**	1.50 **(38.1)**	2.25 **(57.2)**	3.00 **(76)**	1.50 **(38.1)**	1.00 **(25.4)**	1.00 **(25.4)**	0.35 **(8.9)**	1.38 **(35)**
	21L16M	16MF	1	0.562 **(14.3)**	2.06 **(52.3)**	3.00 **(76)**	4.13 **(105)**	2.06 **(52.3)**	1.38 **(35)**	1.38 **(35)**	0.53 **(13.5)**	1.77 **(45)**
Tee												
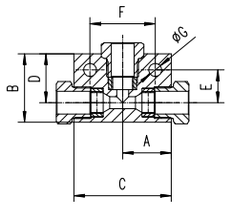	21T4M	4MF	1/4	0.106 **(2.7)**	0.75 **(19.1)**	1.10 **(28)**	1.54 **(39.1)**	0.75 **(19.1)**	0.49 **(12.5)**	0.49 **(12.5)**	0.22 **(5.6)**	0.63 **(16)**
	21T6M	6MF	3/8	0.201 **(5.1)**	1.00 **(25.4)**	1.38 **(35)**	2.00 **(50.8)**	1.00 **(25.4)**	0.63 **(16)**	0.63 **(16)**	0.26 **(6.6)**	0.79 **(20.1)**
	21T9M	9MF	9/16	0.307 **(7.8)**	1.25 **(31.8)**	1.75 **(44.5)**	2.50 **(63.5)**	1.25 **(31.8)**	0.84 **(21.3)**	0.84 **(21.3)**	0.33 **(8.4)**	1.02 **(25.9)**
	21T12M	12MF	3/4	0.438 **(11.1)**	1.50 **(38.1)**	2.25 **(57.2)**	3.00 **(76)**	1.50 **(38.1)**	1.00 **(25.4)**	1.00 **(25.4)**	0.35 **(8.9)**	1.38 **(35)**
	21T16M	16MF	1	0.562 **(14.3)**	2.06 **(52.3)**	3.00 **(76)**	4.13 **(105)**	2.06 **(52.3)**	1.38 **(35)**	1.38 **(35)**	0.53 **(13.5)**	1.77 **(45)**

See page 2 in the Technical Section for pressure/temperature rating chart.
All dimensions are for reference only and are subject to change.

All technical and dimensional information subject to change. All general Terms and Conditions of sale, including limitations of our liability, apply to all products and services sold.

Medium Pressure Fittings

» Pressures to 22,500 psi (1,550 bar)

Fitting Pattern	Catalog Number	Connection Type	O.D. Tube Size in.	Orifice in. (mm)	Dimensions in. (mm) A	B	C	D	E	F	G	Block Thick-ness
Cross												
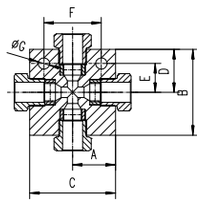	21X4M	4MF	1/4	0.106 (2.7)	0.77 (19.5)	1.54 (39.1)	1.54 (39.1)	0.77 (19.5)	0.49 (12.5)	0.98 (25)	0.22 (5.6)	0.63 (16)
	21X6M	6MF	3/8	0.201 (5.1)	1.00 (25.4)	2.00 (50.8)	2.00 (50.8)	1.00 (25.4)	0.63 (16)	1.26 (32)	0.26 (6.6)	0.79 (20.1)
	21X9M	9MF	9/16	0.307 (7.8)	1.25 (31.8)	2.50 (63.5)	2.50 (63.5)	1.25 (31.8)	0.84 (21.3)	1.67 (42.6)	0.33 (8.4)	1.02 (25.9)
	21X12M	12MF	3/4	0.438 (11.1)	1.50 (38.1)	3.00 (76)	3.00 (76)	1.50 (38.1)	1.00 (25.4)	2.00 (50.8)	0.35 (8.9)	1.38 (35)
	21X16M	16MF	1	0.562 (14.3)	2.06 (52.3)	4.13 (105)	4.13 (105)	2.06 (52.3)	1.38 (35)	2.76 (70)	0.53 (13.5)	1.77 (45)
Straight Coupling / Union Coupling												
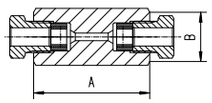 Straight Coupling	21F4M	4MF	1/4	0.106 (2.7)	1.62 (41.1)	0.69 (17.5)	Straight Coupling					
	21UF4M						Union Coupling					
	21F6M	6MF	3/8	0.201 (5.1)	1.75 (44.5)	0.88 (22.3)	Straight Coupling					
	21UF6M						Union Coupling					
	21F9M	9MF	9/16	0.307 (7.8)	2.12 (53.8)	1.06 (27)	Straight Coupling					
	21UF9M						Union Coupling					
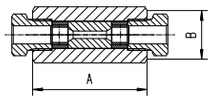 Union Coupling	21F12M	12MF	3/4	0.438 (11.1)	2.50 (63.5)	1.44 (36.5)	Straight Coupling					
	21UF12M						Union Coupling					
	21F16M	16MF	1	0.562 (14.3)	3.50 (88.9)	2.00 (50.8)	Straight Coupling					
	21UF16M						Union Coupling					
Bulkhead Coupling												
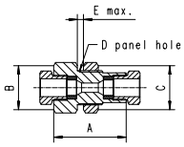	21BF4M	4MF	1/4	0.106 (2.7)	1.88 (47.8)	1.06 (27)	1.06 (27)	0.81 (20.6)	0.67 (17)			
	21BF6M	6MF	3/8	0.201 (5.1)	2.01 (51)	1.06 (27)	1.06 (27)	0.94 (23.9)	0.39 (9.9)			
	21BF9M	9MF	9/16	0.307 (7.8)	2.38 (60.5)	1.44 (36.5)	1.44 (36.5)	1.12 (28.5)	0.39 (9.9)			
	21BF12M	12MF	3/4	0.438 (11.1)	2.81 (71.4)	1.62 (41.3)	1.62 (41.3)	1.37 (34.8)	0.47 (11.9)			
	21BF16M	16MF	1	0.562 (14.3)	3.54 (89.9)	2.00 (50.8)	2.00 (50.8)	1.68 (42.6)	0.51 (13)			
Manifold Block												
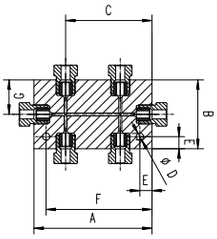	21MB64M	4MF	1/4	0.106 (2.7)	3.39 (86)	1.54 (39.1)	2.6 (66)	0.22 (5.5)	0.28 (7)	3.11 (79)	0.77 (19.5)	0.63 (16)
	21MB66M	6MF	3/8	0.201 (5.1)	3.39 (86)	2.00 (50,8)	2.38 (60.5)	0.26 (6.5)	0.37 (9.5)	3.01 (76.5)	1.00 (25.5)	0.79 (20.1)
	21MB69M	9MF	9/16	0.307 (7.8)	5.12 (130)	2.50 (63.5)	3.86 (98)	0.33 (8.5)	0.41 (10.5)	4.7 (119.5)	1.25 (31.75)	1.02 (25.9)
	21MB612M	12MF	3/4	0.438 (11.1)	6.50 (165)	3.00 (76)	5.00 (127)	0.35 (9)	0.49 (12.5)	6.00 (152.5)	1.5 (38)	1.38 (35)
	21MB616M	16MF	1	0.562 (14.3)	7.25 (191)	4.13 (105)	5.45 (138,5)	0.53 (13.5)	0.69 (17.5)	6.83 (173.5)	2.07 (52.5)	1.77 (45)

All dimensions are for reference only and are subject to change. See page 2 in the Technical Section for pressure/temperature rating chart.
All technical and dimensional information subject to change. All general Terms and Conditions of sale, including limitations of our liability, apply to all products and services sold.

Anti-Vibration Collet Gland Assembly

» Pressures to 22,500 psi (1,550 bar)

Anti-vibration collet gland assemblies

Maximator anti-vibration collet gland assemblies are for use in applications where there could be extreme external mechanical vibrations or shock in tubing lines. These collet gland assemblies are interchangeable with the standard medium pressure coned and threaded tube connections.

In a normal coned and threaded tube connection, any external mechanical loading on the tubing lines, valves or fittings would be concentrated on the first thread of the tube. This can cause failure of the tube at this thinner cross-section. The anti-vibration collet gland assembly grips the tube behind the connection, supporting the tube at the full cross-section and straight area, moving the loading away from the threaded area.

The back part of the assembly has a gland nut that, when tightened properly, compresses a split collet on the tube, providing the beneficial gripping action. All anti-vibration collet gland assemblies come with a Molybdenum Disulfide Coating to guard against galling of the stainless components.

Gland Pattern	Catalog Number	Part	O.D. Tubing Size in.	Dimensions in. (mm) A	B (Hex.)	C (Hex.)
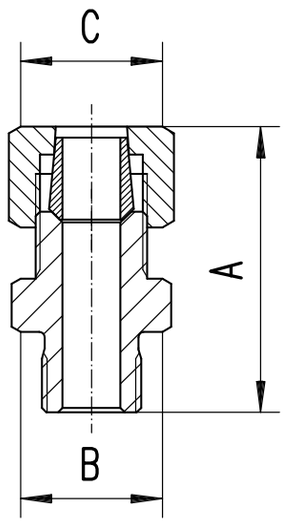	21AVA4M	Complete Assembly	1/4	1.27 **(32.2)**	0.50 **(12,7)**	0.62 **(15.7)**
	21AVB4M	Collet Body				
	21AVC4M	Slotted Collet				
	21AVG4M	Gland Nut				
	21AVA6M	Complete Assembly	3/8	1.54 **(39.1)**	0.62 **(15.7)**	0.81 **(20.6)**
	21AVB6M	Collet Body				
	21AVC6M	Slotted Collet				
	21AVG6M	Gland Nut				
	21AVA9M	Complete Assembly	9/16	1.82 **(46.2)**	0.94 **(23.9)**	0.94 **(23.9)**
	21AVB9M	Collet Body				
	21AVC9M	Slotted Collet				
	21AVG9M	Gland Nut				
	21AVA12M	Complete Assembly	3/4	2.01 **(51)**	1.19 **(30.2)**	1.25 **(31.8)**
	21AVB12M	Collet Body				
	21AVC12M	Slotted Collet				
	21AVG12M	Gland Nut				
	21AVA16M	Complete Assembly	1	2.44 **(62)**	1.38 **(35)**	1.50 **(38.1)**
	21AVB16M	Collet Body				
	21AVC16M	Slotted Collet				
	21AVG16M	Gland Nut				

All dimensions are for reference only and are subject to change.

All technical and dimensional information subject to change. All general Terms and Conditions of sale, including limitations of our liability, apply to all products and services sold.

Check Valves

» Pressures to 22,500 psi (1,550 bar)

O-Ring Check Valves

Maximator O-Ring Check Valves provide high quality directional flow control and tight shut-off for liquids and gases. All check valves are supplied with glands and collars. These check valves are not to be used as a relief device. The opening pressure of the O-Ring Check Valves is approx. 20 psi (1.5 bar).

» Materials:
Body, cover, poppet, cover gland: 316 stainless steel
Spring: 300 series stainless steel
O-ring: FKM "A" [-4°F to 392°F**(-20°C to 200°C)**]

Valve Pattern	Catalog Number	Connection Type	Pressure Rating psi (bar)	Orifice in. (mm)	Rated (Cv)	Dimensions in. (mm) A (Hex.)	Dimensions in. (mm) B
O-Ring Check Valves							
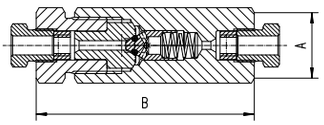	210C4M	4MF	22,500 **(1,550)**	0.106 **(2.7)**	0.28	0.88 **(22.3)**	2.91 **(73.9)**
	210C6M	6MF	22,500 **(1,550)**	0.201 **(5.1)**	0.84	1.06 **(27)**	3.31 **(84.1)**
	210C9M	9MF	22,500 **(1,550)**	0.307 **(7.8)**	2.30	1.44 **(36.5)**	4.29 **(109)**
	210C12M	12MF	22,500 **(1,550)**	0.438 **(11.1)**	4.70	2.00 **(50.8)**	5.46 **(138.7)**
	210C16M	16MF	22,500 **(1,550)**	0.562 **(14.3)**	7.40	2.00 **(50.8)**	6.57 **(166.9)**

CAUTION: FREQUENT INSPECTIONS of O-Rings are necessary to ensure proper service of the check valve.
O-Rings have shown satisfactory service life in testing, however different service conditions may lead to variations in cycle and shelf life.

All dimensions are for reference only and subject to change.

All technical and dimensional information subject to change. All general Terms and Conditions of sale, including limitations of our liability, apply to all products and services sold.

Check Valves

» Pressures to 22,500 psi (1,550 bar)

Ball Check Valves

Ball Check Valves prevent reverse flow where bubble tight shut-off is not mandatory. These check valves are designed with a ball cradled floating poppet to assure positive inline seating. This poppet design allows full flow around the ball to minimize pressure drop. Check valves are rated to 660°F **(350°C)**. All check valves are supplied with glands and collars. These check valves are not to be used as a relief device. The opening pressure of the Ball Check Valves is approx. 20 psi (1.5 bar).

» Materials:
Body, cover, poppet, cover gland: 316L series stainless steel
Ball and spring: 300 series stainless steel.

Valve Pattern	Catalog Number	Connection Type	Pressure Rating psi (bar)	Orifice in. (mm)	Rated (Cv)	Dimensions in. (mm) A (Hex.)	Dimensions in. (mm) B
Ball Check Valves							
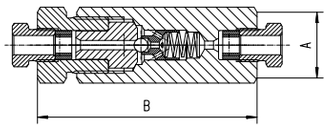	21BC4M	4MF	22,500 **(1,550)**	0.106 **(2.7)**	0.28	0.88 **(22.3)**	2.91 **(73.9)**
	21BC6M	6MF	22,500 **(1,550)**	0.201 **(5.1)**	0.84	1.06 **(27)**	3.31 **(84.1)**
	21BC9M	9MF	22,500 **(1,550)**	0.307 **(7.8)**	2.30	1.44 **(36.5)**	4.29 **(109)**
	21BC12M	12MF	22,500 **(1,550)**	0.438 **(11.1)**	4.70	2.00 **(50.8)**	5.46 **(138.7)**
	21BC16M	16MF	22,500 **(1,550)**	0.562 **(14.3)**	7.40	2.00 **(50.8)**	6.57 **(166.9)**

All dimensions are for reference only and subject to change.

All technical and dimensional information subject to change. All general Terms and Conditions of sale, including limitations of our liability, apply to all products and services sold.

Line Filters

» Pressures to 22,500 psi (1,550 bar)

Dual-Disc Line Filters

Maximator Dual-Disc Line Fillters are used to filter process fluids in high pressure systems. This design helps remove the large particles first through a coarse primary disc, which then allows a secondary disc to provide a smaller micron filtration. These filter elements are designed to withstand pressure surges without cracking, flaking, or rupturing. Filter elements come standard in the following micron sizes: 5/8, 8/30, 30/56 (secondary/primary). Filters are rated for temperatures -423°F to 660°F **(-252°C to 350°C)**. All line filters come with glands and collars.

» Materials:

Body, cover, cover gland: 316L series stainless steel
Element: 316 stainless steel

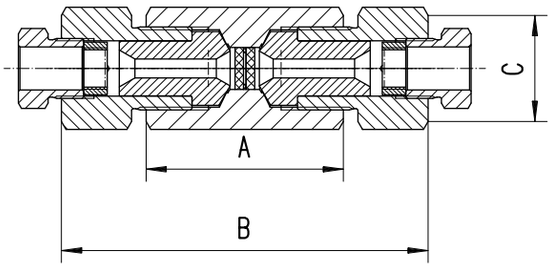

Cup-Type Line Filters

Maximator Cup-Type Line Filters are used when maximum filtration surface area and a single micron size element is preferred. This design increases the filter area as much as 6 times the area of the disc type filter, and will permit higher flow rates with a lower pressure drop, and longer intervals between element changes. Filter elements come standard in 5, 30, or 56 micron sizes and are easily replaced. Filters are rated for temperatures -423°F to 660°F **(-252°C to 350°C).** All line filters come with glands and collars.

» Materials:

Body, cover, cover gland: 316L series stainless steel
Element: 316 stainless steel

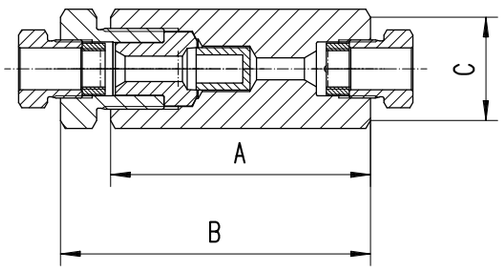

Catalog Number	Pressure Rating psi (bar)	Orifice in. (mm)	Micron Size	Connection Type	Filter Element Area in.² (mm)²	Dimensions in. (mm) A	B	C (Hex.)
Dual-Disc Line Filters								
21DF9M - 5/8	22,500 (1,550)	0.265 (6.5)	5/8	9MF	0.25 (160)	2.68 (68.1)	4.96 (126)	1.44 (36.5)
21DF9M - 8/30			8/30					
21DF9M - 30/56			30/56					
Cup-Type Line Filters								
21CF4M-5	22,500 (1,550)	0.106 (2.7)	5	4MF	0.82 (530)	2.38 (60.5)	2.87 (72.9)	0.88 (22.3)
21CF4M-30			30					
21CF4M-56			56					
21CF6M-5	22,500 (1,550)	0.201 (5.1)	5	6MF	0.82 (530)	2.83 (71.8)	3.35 (85.1)	1.06 (27)
21CF6M-30			30					
21CF6M-56			56					
21CF9M-5	22,500 (1,550)	0.307 (7.8)	5	9MF	1.55 (1,000)	3.63 (92.2)	4.33 (110)	1.44 (36.5)
21CF9M-30			30					
21CF9M-56			56					
21CF12M-5	22,500 (1,550)	0.438 (11.1)	5	12MF	6.14 (3,960)	5.75 (146)	6.57 (166.9)	2.00 (50.8)
21CF12M-30			30					
21CF12M-56			56					
21CF16M-5	22,500 (1,550)	0.562 (14.3)	5	16MF	6.14 (3,960)	5.75 (146)	6.57 (166.9)	2.00 (50.8)
21CF16M-30			30					
21CF16M-56			56					

It is recommended that all fluids entering a high pressure system be thoroughly cleaned.
Maximator filters are designed to remove small amounts of process particles. Pressure differential should not exceed 1000 psi across the filter elements.
All dimensions for reference only and are subject to change.

All technical and dimensional information subject to change. All general Terms and Conditions of sale, including limitations of our liability, apply to all products and services sold.

Angle Filters

» Pressures to 22,500 psi (1,550 bar)

Angel Filters

Maximator Angle Filters are used to filter gases or liquids in high pressure systems. The filter elements can be easily changed in-situ. The special design allows the exchange of the filter element without the need to first disassemble the filter in front of the tubing. Filter elements are made of sintered material with pore sizes of 5 µm, 30 µm or 56 µm. Filters are rated for temperatures -423°F to 660°F **(-252°C to 350°C)**. All angle filters come with glands and collars.

» Material:
Body, cover, cover gland: 316L series stainless steel
Element: 316 stainless steel

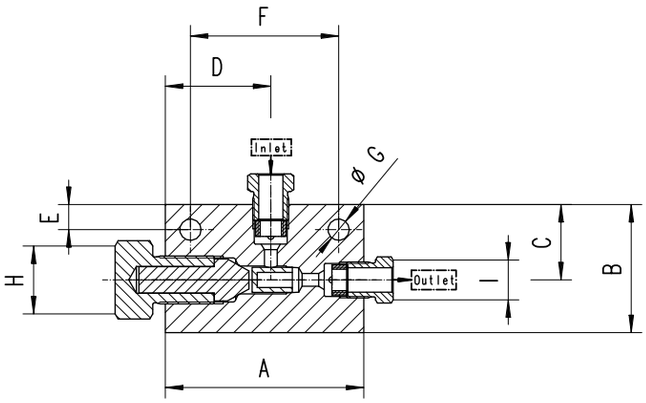

Catalog Number	Pressure Rating psi (bar)	Orifice in. (mm)	Connection Type	Micron Size	Filter Element Areas in.^{2} (mm^2)	Dimensions in. (mm) A	B	C	D	E	F	G	H (Hex.)	I (Hex.)	Block thickness
Angle Filter															
21AF4M-5	22,500 (1,550)	0.106 (2.7)	4M	5	0.82 (530)	3.11 (79)	2.01 (51)	1.18 (30)	1.65 (42)	0.39 (10)	2.32 (59)	0.34 (8.5)	1.06 (27)	0.50 (12.7)	1.02 (26)
21AF4M-30				30											
21AF4M-56				56											
21AF6M-5	22,500 (1,550)	0.201 (5.1)	6M	5	0.82 (530)	3.11 (79)	2.01 (51)	1.18 (30)	1.65 (42)	0.39 (10)	2.32 (59)	0.34 (8.5)	1.06 (27)	0.50 (12.7)	1.02 (26)
21AF6M-30				30											
21AF6M-56				56											
21AF9M-5	22,500 (1,550)	0.307 (7.8)	9M	5	1.55 (1,000)	3.62 (92)	2.64 (67)	1.61 (41)	1.81 (46)	0.51 (13)	2.17 (55)	0.34 (8.5)	1.19 (30.2)	0.94 (23.8)	1.54 (39)
21AF9M-30				30											
21AF9M-56				56											
21AF12M-5	22,500 (1,550)	0.438 (11.1)	12M	5	6.14 (3,960)	5.71 (145)	3.54 (90)	2.3 (57.2)	2.44 (62)	0.39 (10)	4.92 (125)	0.34 (8.5)	2.00 (50.8)	1.19 (30.2)	2.25 (57.15)
21AF12M-30				30											
21AF12M-56				56											
21AF16M-5	22,500 (1,550)	0.562 (14.3)	16M	5	6.14 (3.960)	5.71 (145)	3.54 (90)	2.3 (57.2)	2.44 (62)	0.39 (10)	4.92 (125)	0.34 (8.5)	2.00 (50.8)	1.38 (34.9)	2.25 (57.15)
21AF16M-30				30											
21AF16M-56				56											

It is recommended that all fluids entering a high pressure system be thoroughly cleaned.
Maximator filters are designed to remove small amounts of process particles. Pressure differential should not exceed 1000 psi across the filter elements.
All dimensions for reference only and are subject to change.

All technical and dimensional information subject to change. All general Terms and Conditions of sale, including limitations of our liability, apply to all products and services sold.

Safety Head Assembly

» Pressures to 22,500 psi (1,550 bar)

Safety head assemblies

Maximator safety head assemblies are used to provide over-pressure protection to high pressure systems. These safety head assemblies are to be used with the appropriate 1/4” angular rupture disc listed in the chart below.

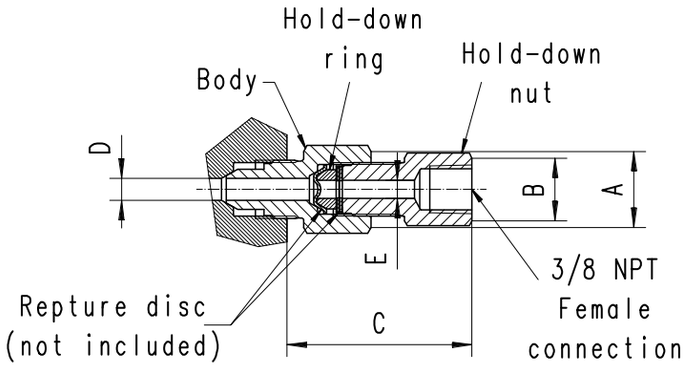

Safety Head Assembly Catalog Number without Disc	Fits Connection Type	Pressure Rating psi (bar)	Body Torque ft - lbs. (Nm)	Dimensions in. (mm) A (Hex.)	B (Hex.)	C (LG.)	D (I.D.)	E (I.D.)
21SH4M	4MF	22,500 **(1,550)**	20 **(30)**	1,06 **(27)**	0.88 **(22.3)**	2.48 **(63)**	0.109 **(2.8)**	0.250 **(6.3)**
21SH6M	6MF	22,500 **(1,550)**	30 **(40)**	1,06 **(27)**	0.88 **(22.3)**	2.72 **(69.1)**	0.203 **(5.1)**	0.250 **(6.3)**
21SH9M	9MF	22,500 **(1,550)**	55 **(75)**	1,06 **(27)**	0.88 **(22.3)**	2.51 **(63.7)**	0.255 **(6.5)**	0.250 **(6.3)**
21SH12M	12MF	22,500 **(1,550)**	90 **(120)**	1,19 **(30.2)**	0.88 **(22.3)**	2.72 **(69.1)**	0.307 **(7.8)**	0.250 **(6.3)**
21SH16M	16MF	22,500 **(1,550)**	150 **(200)**	1.44 **(36.6)**	0.88 **(22.3)**	2.72 **(69.1)**	0.307 **(7.8)**	0.250 **(6.3)**

All dimensions for reference only and are subject of change

Rupture disc
flat design
up to 8,700 psi **(600 bar)**

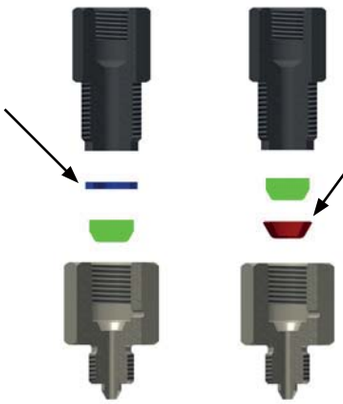

Rupture disc
hat-shaped design
≥ 8,700 psi **(600 bar)**

All technical and dimensional information subject to change. All general Terms and Conditions of sale, including limitations of our liability, apply to all products and services sold.

1/4“ Rupture Discs

1/4“ Rupture discs

1/4“ angular and flat seat rupture discs are designed to be used with the safety head assemblies that are shown on page 13. Minimum rupture disc pressure ratings should be at least 110% of system operating pressure. The standard material is stainless steel. The pressure ranges indicated in the table below are at room temperature (72°F).Other materials and pressure ranges are available upon request.

Catalog Number	Pressure range psi (bar)
RD-1000	970 - 1,060 **(66.9 - 73.1)**
RD-1200	1,164 - 1,272 **(80.3 - 87.7)**
RD-1500	1,455 - 1,590 **(99.7 - 109.7)**
RD-1750	1,697 - 1,855 **(117 - 127.9)**
RD-2000	1,940 - 2,120 **(133.8 - 146.2)**
RD-2500	2,425 - 2,650 **(167.2 - 182.8)**
RD-3000	2,910 - 3,180 **(200.7 - 219.3)**
RD-3500	3,395 - 3,710 **(234.1 - 255.9)**
RD-4000	3,880 - 4,240 **(267.6 - 292.4)**
RD-4500	4,365 - 4,770 **(301 - 329)**
RD-5000	4,850 - 5,300 **(334.5 - 365.5)**

Catalog Number	Pressure range psi (bar)
RD-5500	5,335 - 5,830 **(367.9 - 402.1)**
RD-6000	5,820 - 6,360 **(401.4 - 438.6)**
RD-6500	6,305 - 6,890 **(434.8 - 475.2)**
RD-7000	6,790 - 7,420 **(468.3 - 511.7)**
RD-7500	7,275 - 7,950 **(501.7 - 548.3)**
RD-8000	7,760 - 8,480 **(535.2 - 584.8)**
RD-8500	8,245 - 9,010 **(568.6 - 621.4)**
RD-9000	8,730 - 9,540 **(602.1 - 657.9)**
RD-9500	9,215 - 10,070 **(635.5 - 694.5)**
RD-10000	9,700 - 10,600 **(669 - 731)**
RD-11000	10,670 -11,660 **(735.9 - 804.1)**

Catalog Number	Pressure range psi (bar)
RD-12000	11,640 - 12,720 **(802.8 - 877.2)**
RD-13000	12,610 - 13,780 **(869.7 - 950.3)**
RD-14000	13,580 - 14,840 **(936.6 - 1023.4)**
RD-15000	14,550 - 15,900 **(1,003.4 - 1,096.6)**
RD-16000	15,520 - 16,960 **(1,070.3 - 1,169.7)**
RD-17000	16,490 - 18,020 **(1,137.2 - 1,242.8)**
RD-18000	17,460 - 19,080 **(1,204.1 - 1,315.9)**
RD-19000	18,430 - 20,140 **(1,271 - 1,389)**
RD-20000	19,400 - 21,200 **(1,337.9 - 1,462.1)**
RD-21000	20,370 - 22,260 **(1,404.8 - 1,535.2)**
RD-22000	21,340 - 23,320 **(1,471.7 - 1,608.3)**

Rupture Discs are individually packed and marked type plate.

All technical and dimensional information subject to change. All general Terms and Conditions of sale, including limitations of our liability, apply to all products and services sold.

Relief Valves

» Pressures to 22,500 psi (1,550 bar)

Relief Valves

Maximator Medium Pressure Relief Valves with metal seat provide reliable venting of liquids for set pressure from 4,350 psi (300 bar) up to 22,500 psi (1,550 bar). The relief valves are intended to be used as an adjustable pressure relief device actuated by inlet static pressure having a gradual lift generally proportional to the increase in pressure over opening pressure.
All relief valves are ATEX (CE Ex II 2D/2G IIC c TX) approved, have a 1/4“ NPT relief connection, are equipped with a replaceable seat and come with glands and collars.

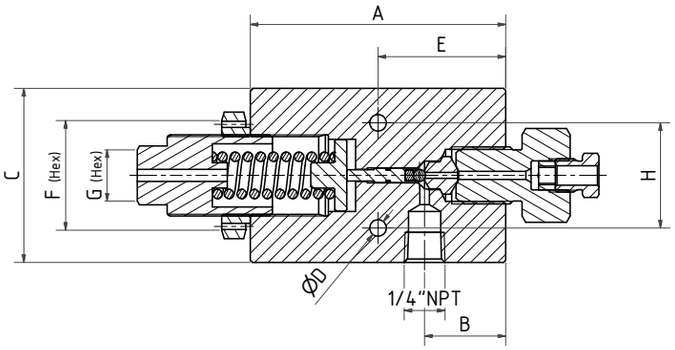

Materials:
Body, double cone: 316 stainless steel
Spring: 300 series stainless steel
O-ring: FKM “A” [-4°F to 392°F (**-20°C to 200°C**)]

Catalog Number	Pressure Rating psi (bar)	Pressure Range min./max. psi (bar)	Orifice in. (mm)	Connection Type	Dimensions in. (mm) A	B	C	D	E	F (Hex.)	G (Hex.)	H	Block thick-ness
17RV4M	17,000 **(1,200)**	4,350 / 17,000 **(300 / 1,200)**	0,08 **(2.0)**	4MF	3.35 **(85)**	1.06 **(27)**	2.64 **(67)**	0.22 **(5.5)**	1.67 **(42.5)**	1.44 **(36.5)**	0.67 **(17)**	1.38 **(35)**	1.54 **(39)**
17RV6M	17,000 **(1,200)**	4,350 / 17,000 **(300 / 1,200)**	0,08 **(2.0)**	6MF	3.35 **(85)**	1.06 **(27)**	2.64 **(67)**	0.22 **(5.5)**	1.67 **(42.5)**	1.44 **(36.5)**	0.67 **(17)**	1.38 **(35)**	1.54 **(39)**
21RV4M	22,500 **(1,550)**	14,500 / 22,500 **(1,000 / 1,550)**	0,08 **(2.0)**	4MF	3.35 **(85)**	1.06 **(27)**	2.64 **(67)**	0.22 **(5.5)**	1.67 **(42.5)**	1.44 **(36.5)**	0.67 **(17)**	1.38 **(35)**	1.54 **(39)**
21RV6M	22,500 **(1,550)**	14,500 / 22,500 **(1,000 / 1,550)**	0,08 **(2.0)**	6MF	3.35 **(85)**	1.06 **(27)**	2.64 **(67)**	0.22 **(5.5)**	1.67 **(42.5)**	1.44 **(36.5)**	0.67 **(17)**	1.38 **(35)**	1.54 **(39)**

All dimensions for reference only and are subject of change

All technical and dimensional information subject to change. All general Terms and Conditions of sale, including limitations of our liability, apply to all products and services sold.

Medium Pressure Tubing

» Pressures to 22,500 psi (1,550 bar)

Medium Pressure Tubing

Maximator offers a line of cold drawn thick wall tubing, with flow areas to compliment the large orifce medium pressure valves and fittings. This tubing is made under strict manufacturing and quality control standards and inspections, with dimensional tolerances to match the requirements of the medium pressure coned and threaded connections.

The standard materials are 304 and 316 stainless steels. Other materials may be provided on special request, depending on the specific material, diameters and lengths.

Tubing Tolerances

Normal Tubing Size in. (mm)	Tolerance O.D in. (mm)
1/4 **(6.35)**	0.248 / 0.243 **(6.299 / 6.172)**
3/8 **(9.53)**	0.370 / 0.365 **(9.398 / 9.271)**
9/16 **(14.29)**	0.557 / 0.552 **(14.147 / 14.021)**
3/4 **(19.05)**	0.745 / 0.740 **(18.923 / 18.796)**
1 **(25.4)**	0.995 / 0.990 **(25.273 / 25.174)**

Catalog Number	Tube Material	Fits Connection Type	Tube Size in. (mm)		Working Pressure psi (bar)				
			O.D.	I.D.	-325°F to 100°F (-198°C to 37°C)	200°F (93°C)	400°F (204°C)	600°F (315°C)	800°F (426°C)
21TU4M-316	316SS	4MF	1/4	0.109 **(2.77)**	22,500 **(1,550)**	18,900 **(1,300)**	17,430 **(1,200)**	15,960 **(1,100)**	15,120 **(1,040)**
21TU4M-304	304SS								
21TU6M-316	316SS	6MF	3/8	0.203 **(5.17)**	22,500 **(1,550)**	18,900 **(1,300)**	17,430 **(1,200)**	15,960 **(1,100)**	15,120 **(1,040)**
21TU6M-304	304SS								
21TU9M-316	316SS	9MF	9/16	0.312 **(7.93)**	22,500 **(1,550)**	18,900 **(1,300)**	17,430 **(1,200)**	15,960 **(1,100)**	15,120 **(1,040)**
21TU9M-304	304SS								
15TU9M-316	316SS	9MF	9/16	0.359 **(9.12)**	15,200 **(1,050)**	13,680 **(940)**	12,616 **(870)**	11,552 **(790)**	10,944 **(750)**
15TU9M-304	304SS								
21TU12M-316	316SS	12M	3/4	0.438 **(11.13)**	22,500 **(1,550)**	18,900 **(1,300)**	17,430 **(1,200)**	15,960 **(1,100)**	15,120 **(1,040)**
15TU12M-316	316SS			0.516 **(13.11)**	15,200 **(1,050)**	13,680 **(940)**	12,616 **(870)**	11,552 **(790)**	10,944 **(750)**
21TU16M-316	316SS	16MF	1	0.562 **(14.27)**	22,500 **(1,550)**	18,900 **(1,300)**	17,430 **(1,200)**	15,960 **(1,100)**	15,120 **(1,040)**
15TU16M-316	316SS			0.688 **(17.48)**	15,200 **(1,050)**	13,680 **(940)**	12,616 **(870)**	11,552 **(790)**	10,944 **(750)**

All dimensions for reference only and are subject of change

All technical and dimensional information subject to change. All general Terms and Conditions of sale, including limitations of our liability, apply to all products and services sold.

Coned and Threaded Nipples

» Pressures to 22,500 psi (1,550 bar)

Coned and threaded nipples

Maximator offers a line of coned and threaded medium pressure tube nipples in a variety of lengths for all standard tube sizes. The coned and threaded medium pressure tube nipples are available in 316 stainless steel.

They are also available in the 15,200 psi (1,050 bar) or 22,500 psi 1,550 bar) versions for the 9/16", 3/4" and 1" OD tube sizes. See chart below for ordering information.

Special length coned and threaded nipples are available upon request. Consult Maximator for availability and price

Catalog Numbers are 316 Stainless Steel material							Fits Con-nection Type	Tube Size in. (mm)		Working Pressure at 100°F psi (bar)
2.75" (69.85) Length	3" (76.2) Length	4" (101.6) Length	6" (152.4) Length	8" (203.2) Length	10" (254) Length	12" (304.8) Length		O.D.	I.D.	
21N4M-2.75-316	21N4M-3-316	21N4M-4-316	21N4M-6-316	21N4M-8-316	21N4M-10-316	21N4M-12-316	4MF	1/4	0.109 **(2.77)**	22,500 **(1,550)**
	21N6M-3-316	21N6M-4-316	21N6M-6-316	21N6M-8-316	21N6M-10-316	21N6M-12-316	6MF	3/8	0.203 **(5.17)**	22,500 **(1,550)**
		21N9M-4-316	21N9M-6-316	21N9M-8-316	21N9M-10-316	21N9M-12-316	9MF	9/16	0.312 **(7.93)**	22,500 **(1,550)**
		15N9M-4-316	15N9M-6-316	15N9M-8-316	15N9M-10-316	15N9M-12-316	9MF	9/16	0.359 **(9.12)**	15,200 **(1,050)**
			21N12M-6-316	21N12M-8-316	21N12M-10-316	21N12M-12-316	12MF	3/4	0.438 **(11.13)**	22,500 **(1,550)**
			15N12M-6-316	15N12M-8-316	15N12M-10-316	15N12M-12-316	12MF	3/4	0.516 **(13.11)**	15,200 **(1,050)**
			21N16M-6-316	21N16M-8-316	21N16M-10-316	21N16M-12-316	16MF	1	0.562 **(14.27)**	22,500 **(1,550)**
			15N16M-6-316	15N16M-8-316	15N16M-10-316	15N16M-12-316	16MF	1	0.688 **(17.48)**	15,200 **(1,050)**

Standard nipples are not supplied with glands and collars, see Fittings on page 6 for these components.
See adjacent Tubing page 16, for pressure/temperature rating chart.

All dimensions are for reference only and subject to change.

All technical and dimensional information subject to change. All general Terms and Conditions of sale, including limitations of our liability, apply to all products and services sold.

High Pressure Valves, Fittings and Tubing

» Pressures to 65,000 psi (4,500 bar)

MAXIMATOR has been designing and manufacturing high pressure equipment for more than thirty years and has a worldwide reputation for quality and reliability, backed by one of the best service organizations in the industry.

High Pressure Valves feature:

- Rising stem design.
- 316 L (1.4404) wetted parts and 17-4 PH Stem for excellent corrosion resistance.
- Metal-to-metal seating achieves bubble-tight shut-off, longer stem and seat life, greater durability for repeated open and close cycles.
- PTFE and carbon packing with metal back-up rings offers reliable stem to body sealing.
- Non-rotating stem prevents stem to seat galling.
- Stem sleeve and packing gland materials have been selected to achieve optimum thread cycle life and reduced handle torque. All stem sleeve threads are rolled, assuring smooth operation.
- Safety weep holes for all pressure connections and packing area.
- Six different valve body patterns, with choice of vee or regulating type stem tip.

MAXIMATOR offers a complete line of high pressure valves, fittings, tubing, check valves, line filters, anti-vibration fittings and safety head assemblies. All high pressure valves and fittings use the high pressure style connection.

Note: When selecting multiple items, the pressure rating would be that of the lowest rated component.

High Pressure Index	Page:
Valves rated to 36,000 psi **(2,500 bar)**.	2 – 3
Valves rated to 43,000 psi **(2,965 bar)**.	4 – 5
Fittings, Anti-Vibration and Safety Head Assamblies rated to 43,000 psi **(2,965 bar)**	6 – 7
Check Valves rated to 43,000 psi **(2,965 bar)**	8
Tubing, Coned and Threaded Nipples rated to 43,000 psi **(2,965 bar)**	9
Valves rated to 65,000 psi **(4,500 bar)**.	10 – 11
Fittings	12 – 13
Anti-Vibration Collet Gland Assemblies	14
Check Valves	15
Line Filters	16
Angle Filters	17
Safety Head Assemblies, Rupture Discs and Pressure Relief Valves	18 – 20
Tubing	21
Coned and Threaded Nipples	22

MAXIMATOR GmbH, Lange Straße 6, 99734 Nordhausen, Telefon +49 (0) 3631 9533 – 0, Telefax + 49 (0) 3631 9533 – 5010, www.maximator.de, info@maximator.de

All technical and dimensional information subject to change. All general Terms and Conditions of sale, including limitations of our liability, apply to all products and services sold.

High Pressure Valves

» Pressures to 36,000 psi (2,500 bar)

High pressure valves

Maximator high pressure valves with metal to metal seats have a high level of safety and reliability under adverse operating conditions. These valves may be used both with gases and liquids.

Traceability is ensured through extensively documented data (batch number, max. pressure, material number, type designation). All high pressure valves include glands and collars.

Ordering Information
Typical catalog number: 36V4H872

36 V Valve Series	4H O.D. Tube Size	87 Stem Type	2 Body Pattern	Options
36 V	**4H** – 1/4”	**07** – VEE stem	**1** – two-way straight	Extreme
	6H – 3/8”	**08** – REGULATING stem*	**2** – two-way angle	temperature
	9H – 9/16”	**87** – VEE stem with replaceable seat	**3** – three-way, two on pressure	option, see
		88 – REGULATING stem with replaceable seat*	**4** – three-way, one on pressure	information
			5 – three-way, two-stem manifold	below.

Options for High pressure valves

Special Designs for Extreme Temperatures
Standard valves are supplied with Teflon / Carbon packing and may be operated to 450°F **(230°C)**. High temperature packing and / or extended stuffing box are available for service from -423°F to 1200°F **(-252°C to 650°C)** by adding the following suffixes to catalog order number.

- **TG** – standard valve with teflon glass packing to 600°F **(315°C)**.
- **GY** – standard valve with graphite braided yarn packing to 800°F **(425°C)**.
- **HT** – extended stuffing box valve with graphite braided yarn packing to 1200°F **(650°C)**.
- **B** – standard valve with cryogenic trim materials and Teflon packing to -100°F **(-73°C)**.
- **LT** – extended stuffing box valve with teflon packing and cryogenic trim materials to -423°F **(-252°C)**.

O.D. Size in. (mm)	Connec-tion Type	Orifice Size in. (mm)	Rated Cv**	Pressure Rating @ R.T. psi (bar)***
1/4 **(6.35)**	4HF	0.094 **(2.3)**	0.12	36,000 **(2,500)**
3/8 **(9.53)**	6HF	0.125 **(3.2)**	0.23	36,000 **(2,500)**
9/16 **(14.30)**	9HF	0.125 **(3.2)**	0.33	36,000 **(2,500)**

Consult your MAXIMATOR representative for **repair kits** and valve bodies. Refer to the Technical Information section for proper maintenance procedures.

* tapered tip for regulating and shutoff

** Cv values shown are for 2-way straight pattern vee stem valves. For 2-way angle patterns, increase the Cv value by 50%.

*** See page 2 in the Technical Section for Pressure/Temperature Rating Chart.

All technical and dimensional information subject to change. All general Terms and Conditions of sale, including limitations of our liability, apply to all products and services sold.

Valve Pattern	Catalog Number	Stem Type	O.D. Tube in.	Orifice in. (mm)	Dimensions in. (mm) A	B	C	D	E	F	H	I	J	K	Valve Panel Hole	Block Thick-ness
2-Way Straight																
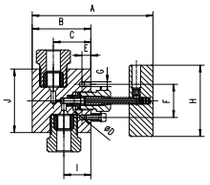	36V4H071	Vee	1/4	0.094	4.76	2.01	1.50	0.22	0.37	1.38	2.95	1.12	2.01		1.00	1.02
	36V4H081	Reg		(2.3)	(121)	(51)	(38)	(5.6)	(9.5)	(35)	(75)	(28.5)	(51)		(25.4)	(25.9)
	36V6H071	Vee	3/8	0.125	4.76	2.01	1.50	0.22	0.37	1.38	2.95	1.12	2.01		1.00	1.02
	36V6H081	Reg		(3.2)	(121)	(51)	(38)	(5.6)	(9.5)	(35)	(75)	(28.5)	(51)		(25.4)	(25.9)
	36V9H071	Vee	9/16	0.125	5.20	2.44	1.56	0.22	0.37	1.38	2.95	1.12	2.64		1.00	1.54
	36V9H081	Reg		(3.2)	(132)	(62)	(39.6)	(5.6)	(9.5)	(35)	(75)	(28.5)	(67)		(25.4)	(39.1)
2-Way Angle																
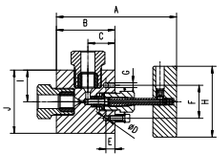	36V4H072	Vee	1/4	0.094	4.76	2.01	1.12	0.22	0.37	1.38	2.95	1.00	2.01		1.00	1.02
	36V4H082	Reg		(2.3)	(121)	(51)	(28.5)	(5.6)	(9.5)	(35)	(75)	(25.4)	(51)		(25.4)	(25.9)
	36V6H072	Vee	3/8	0.125	4.96	2.20	1.10	0.22	0.37	1.38	2.95	1.00	2.01		1.00	1.02
	36V6H082	Reg		(3.2)	(126)	(56)	(28)	(5.6)	(9.5)	(35)	(75)	(25.4)	(51)		(25.4)	(25.9)
	36V9H072	Vee	9/16	0.125	5.20	2.44	1.12	0.22	0.37	1.38	2.95	1.32	2.64		1.00	1.54
	36V9H082	Reg		(3.2)	(132)	(62)	(28.5)	(5.6)	(9.5)	(35)	(75)	(33.5)	(67)		(25.4)	(39.1)
3-Way / 2 on Pressure																
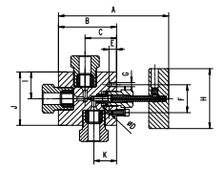	36V4H073	Vee	1/4	0.094	4.89	2.13	1.50	0.22	0.37	1.38	2.95	1.00	2.01	1.12	1.00	1.02
	36V4H083	Reg		(2.3)	(124)	(54.1)	(38)	(5.6)	(9.5)	(35)	(75)	(25.4)	(51)	(28.5)	(25.4)	(25.9)
	36V6H073	Vee	3/8	0.125	5.26	2.50	1.50	0.22	0.37	1.38	2.95	1.00	2.01	1.12	1.00	1.02
	36V6H083	Reg		(3.2)	(133.5)	(63.5)	(38)	(5.6)	(9.5)	(35)	(75)	(25.4)	(51)	(28.5)	(25.4)	(25.9)
	36V9H073	Vee	9/16	0.125	5.63	2.87	1.56	0.22	0.37	1.38	2.95	1.32	2.64	1.12	1.00	1.54
	36V9H083	Reg		(3.2)	(143)	(72.9)	(39.6)	(5.6)	(9.5)	(35)	(75)	(33.5)	(67)	(28.5)	(25.4)	(39.1)
3-Way / 1 on Pressure																
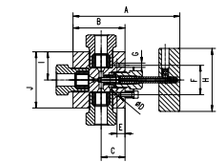	36V4H074	Vee	1/4	0.094	4.76	2.01	1.12	0.22	0.37	1.38	2.95	1.00	2.01		1.00	1.02
	36V4H084	Reg		(2.3)	(121)	(51)	(28.5)	(5.6)	(9.5)	(35)	(75)	(25.4)	(51)		(25.4)	(25.9)
	36V6H074	Vee	3/8	0.125	4.90	2.20	1.12	0.22	0.37	1.38	2.95	1.00	2.01		1.00	1.02
	36V6H084	Reg		(3.2)	(124.5)	(56)	(28.5)	(5.6)	(9.5)	(35)	(75)	(25.4)	(51)		(25.4)	(25.9)
	36V9H074	Vee	9/16	0.125	5.20	2.44	1.12	0.22	0.37	1.38	2.95	1.32	2.64		1.00	1.54
	36V9H084	Reg		(3.2)	(132)	(62)	(28.5)	(5.6)	(9.5)	(35)	(75)	(33.5)	(67)		(25.4)	(39.1)
3-Way / 2-Stem Manifold																
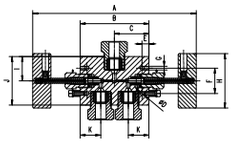	36V4H075	Vee	1/4	0.094	8.54	3.07	1.54	0.22	0.37	1.38	2.95	1.00	2.01	1.12	1.00	1.02
	36V4H085	Reg		(2.3)	(217)	(78)	(39.1)	(5.6)	(9.5)	(35)	(75)	(25.4)	(51)	(28.5)	(25.4)	(25.9)
	36V6H075	Vee	3/8	0.125	8.72	3.25	1.63	0.22	0.37	1.38	2.95	1.00	2.01	1.12	1.00	1.02
	36V6H085	Reg		(3.2)	(221.5)	(82.5)	(41.5)	(5.6)	(9.5)	(35)	(75)	(25.4)	(51)	(28.5)	(25.4)	(25.9)
	36V9H075	Vee	9/16	0.125	9.21	3.74	1.88	0.22	0.37	1.38	2.95	1.32	2.64	1.12	1.00	1.54
	36V9H085	Reg		(3.2)	(234)	(95)	(47.8)	(5.6)	(9.5)	(35)	(75)	(33.5)	(67)	(28.5)	(25.4)	(39.1)
2-Way Angle / Replaceable Seat																
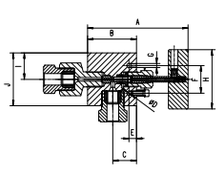	36V4H872	Vee	1/4	0.094	4.96	2.38	1.12	0.22	0.37	1.38	2.95	1.12	2.01		1.00	1.02
	36V4H882	Reg		(2.3)	(126)	(60.5)	(28.5)	(5.6)	(9.5)	(35)	(75)	(28.5)	(51)		(25.4)	(25.9)
	36V6H872	Vee	3/8	0.125	4.96	2.38	1.12	0.22	0.37	1.38	2.95	1.12	2.01		1.00	1.02
	36V6H882	Reg		(3.2)	(126)	(60.5)	(28.5)	(5.6)	(9.5)	(35)	(75)	(28.5)	(51)		(25.4)	(25.9)
	36V9H872	Vee	9/16	0.125	4.93	2.44	1.18	0.22	0.37	1.38	2.95	1.32	2.64		1.00	1.54
	36V9H882	Reg		(3.2)	(125)	(62)	(30)	(5.6)	(9.5)	(35)	(75)	(33.5)	(67)		(25.4)	(39.1)

G - Panel mounting screw thread size 10-24 UNC (screw included). All dimensions are for reference only and are subject to change.

All technical and dimensional information subject to change. All general Terms and Conditions of sale, including limitations of our liability, apply to all products and services sold.

High Pressure Valves

» Pressures to 43,000 psi (2,965 bar)

High pressure valves

Maximator high pressure valves with metal to metal seats have a high level of safety and reliability under adverse operating conditions. These valves may be used both with gases and liquids.

Traceability is ensured through extensively documented data (batch number, max. pressure, material number, type designation). All high pressure valves include glands and collars.

Ordering Information
Typical catalog number: 43V16M072

43 V Valve Series	16M O.D. Tube Size	07 Stem Type	2 Body Pattern
43 V	**16M** – 1”	**07** – VEE stem	**1** – two-way straight
		08 – REGULATING stem*	**2** – two-way angle
		87 – VEE stem with replaceable seat	**3** – three-way, two on pressure
		88 – REGULATING stem with replaceable seat*	**4** – three-way, one on pressure
			5 – three-way, two-stem manifold

O.D. Size in. (mm)	Connection Type	Orifice Size in. (mm)	Rated Cv**	Pressure Rating @ R.T. psi (bar)***
1 **(24.5)**	16MF	0.438 **(11.1)**	2.6	43,000 **(2,965)**

Consult your MAXIMATOR representative for **repair kits** and valve bodies. Refer to the Technical Information section for proper maintenance procedures.

* tapered tip for regulating and shutoff

** Cv values shown are for 2-way straight pattern vee stem valves. For 2-way angle patterns, increase the Cv value by 50%.

*** See page 2 in the Technical Section for Pressure/Temperature Rating Chart.

All technical and dimensional information subject to change. All general Terms and Conditions of sale, including limitations of our liability, apply to all products and services sold.

Valve Pattern	Catalog Number	Stem Type	O.D. Tube in.	Orifice in. (mm)	Dimensions in. (mm) A	B	C	D	E	F	H	I	J	K	Valve Panel Hole	Block Thick-ness
2-Way Straight																
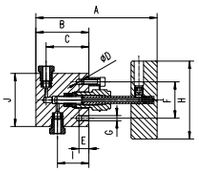	43V16M071	Vee	1	0.438 **(11.1)**	9.472 **(240)**	4.45 **(113)**	3.50 **(88.9)**	0.571 **(14.5)**	1.122 **(28.5)**	2.50 **(63.5)**	10.35 **(263)**	2.736 **(69.5)**	4.921 **(125)**		1.614 **(41)**	2.244 **(57)**
	43V16M081	Reg														
2-Way Angle																
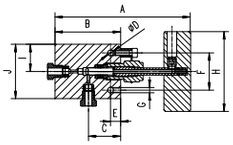	43V16M072	Vee	1	0.438 **(11.1)**	4.76 **(121)**	5.12 **(130)**	1.50 **(38)**	0.571 **(14.5)**	1.122 **(28.5)**	2.50 **(63.5)**	10.35 **(263)**	2.431 **(62.5)**	4.921 **(125)**		1.614 **(41)**	2.244 **(57)**
	43V16M082	Reg														
3-Way / 2 on Pressure																
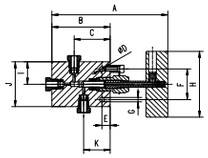	43V16M073	Vee	1	0.438 **(11.1)**	10.19 **(259)**	5.87 **(149)**	3.75 **(95.3)**	0.571 **(14.5)**	1.122 **(28.5)**	2.50 **(63.5)**	10.35 **(263)**	2.431 **(62.5)**	4.921 **(125)**	2.81 **(71.4)**	1.614 **(41)**	2.244 **(57)**
	43V16M083	Reg														
3-Way / 1 on Pressure																
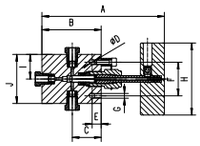	43V16M074	Vee	1	0.438 **(11.1)**	9.52 **(242)**	5.20 **(132)**	2.81 **(71.4)**	0.571 **(14.5)**	1.122 **(28.5)**	2.50 **(63.5)**	10.35 **(263)**	2.431 **(62.5)**	4.921 **(125)**		1.614 **(41)**	2.244 **(57)**
	43V16M084	Reg														
3-Way / 2-Stem Manifold																
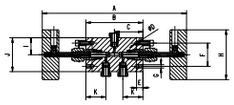	43V16M075	Vee	1	0.438 **(11.1)**	16.18 **(411)**	7.52 **(191)**	3.76 **(95.5)**	0.571 **(14.5)**	1.122 **(28.5)**	2.50 **(63.5)**	10.35 **(263)**	2.431 **(62.5)**	4.921 **(125)**	2.81 **(71.4)**	1.614 **(41)**	2.244 **(57)**
	43V16M085	Reg														
2-Way Angle / Replaceable Seat																
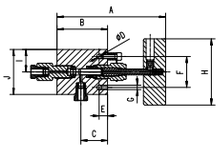	43V16M872	Vee	1	0.438 **(11.1)**	9.61 **(244)**	5.25 **(133)**	2.81 **(71.4)**	0.571 **(14.5)**	1.122 **(28.5)**	2.50 **(63.5)**	10.35 **(263)**	2.431 **(62.5)**	4.921 **(125)**		1.614 **(41)**	2.244 **(57)**
	43V16M882	Reg														

G - Panel mounting screw thread size 10-24 UNC (screw included). All dimensions are for reference only and are subject to change.

All technical and dimensional information subject to change. All general Terms and Conditions of sale, including limitations of our liability, apply to all products and services sold.

High Pressure Fittings

» Pressures to 43,000 psi (2,965 bar)

High pressure fittings

Maximator high pressure fittings are designed to be used with the 43V series high pressure valves and high pressure tubing.
All high pressure fittings have coned and threaded type connections.
Mounting holes are standard on all elbows, tees and crosses.

Tubing Size	Gland	Collar	Plug	Tubing Cap
				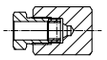
1	43G16M	43C16M	43P16M	43TC16M

Connection Components

All high pressure fittings are supplied with glands and collars. Refer to the adjacent chart for ordering any of the connection components individually. When using the plug, the collar is not needed.

Fitting Pattern	Catalog Number	Connection Type	O.D. Tube Size in.	Orifice in. (mm)	Dimensions in. (mm) A	B	C	D	E	F	G	Block Thick-ness
Elbow												
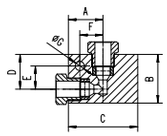	43L16M	16MF	1	0.438 **(11.1)**	2.07 **(52.5)**	3.00 **(76.2)**	4.13 **(105)**	2.06 **(52.3)**	1.38 **(35)**	1.38 **(35)**	0.53 **(13.5)**	1.77 **(45)**
Tee												
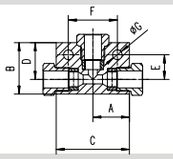	43T16M	16MF	1	0.438 **(11.1)**	2.07 **(52.5)**	3.00 **(76.2)**	4.13 **(105)**	2.06 **(52.3)**	1.38 **(35)**	2.76 **(70)**	0.53 **(13.5)**	1.77 **(45)**
Cross												
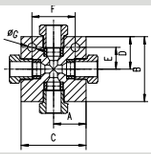	43X16M	16MF	1	0.438 **(11.1)**	2.07 **(52.5)**	4.13 **(105)**	4.13 **(105)**	2.07 **(52.5)**	1.38 **(35.2)**	2.75 **(70)**	0.53 **(13.5)**	1.77 **(45)**
Straight Coupling / Union Coupling												
Straight Coupling 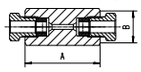	43F16M	16MF	1	0.438 **(11.1)**	3.50 **(89)**	2.00 **(50.8)**	Straight Coupling					
Union Coupling 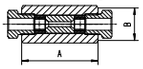	43UF16M						Union Coupling					
Bulkhead Coupling												
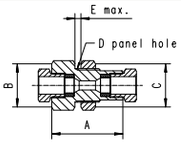	43BF16M	16MF	1	0.438 **(11.1)**	3.50 **(88.9)**	2.00 **(50.8)**	2.36 **(60)**	1.69 **(43)**	0.47 **(12)**			

See page 2 in the Technical Section for pressure/temperature rating chart.
All dimensions are for reference only and are subject to change.
All technical and dimensional information subject to change. All general Terms and Conditions of sale, including limitations of our liability, apply to all products and services sold.

Anti-Vibration and Safety Head Assembly

» Pressures to 43,000 psi (2,965 bar)

Anti-vibration collet gland assemblies

Maximator anti-vibration collet gland assemblies are for use in applications where there could be extreme external mechanical vibrations or shock in tubing lines. These collet gland assemblies are interchangeable with the standard high pressure coned and threaded tube connections.

Gland Pattern	Catalog Number	Part	O.D. Tubing Size in.	Dimensions in. (mm)	
				A	B (Hex.)
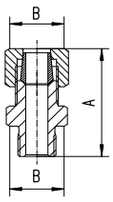	43AVA16M	Complete Assembly	1	2.44 **(61.9)**	1.50 **(38.1)**
	43AVB16M	Collet Body			
	43AVC16M	Slotted Collet			
	43AVG16M	Gland Nut			

All dimensions are for reference only and are subject to change.

Safety head assemblies

Maximator safety head assemblies are used to provide over-pressure protection to high pressure systems. These safety head assemblies are to be used with the appropriate 1/4" angular and flat rupture disc.

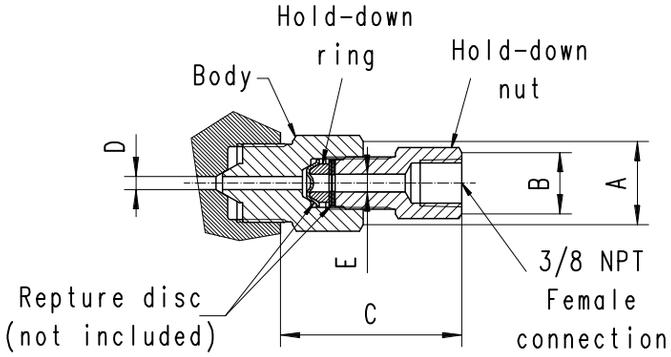

Safety Head Assembly Catalog Number without Disc	Fits Connection Type	Pressure Rating psi (bar)	Body Torque ft - lbs. (Nm)	Dimensions in. (mm)				
				A (Hex.)	B (Hex.)	C (LG.)	D (I.D.)	E (I.D.)
43SH16M	16MF	43,000 **(2,965)**	150 **(200)**	1.44 **(36.5)**	0.88 **(22.4)**	2.72 **(69.1)**	0.307 **(7.8)**	0.250 **(6.3)**

All dimensions for reference only and are subject of change

All technical and dimensional information subject to change. All general Terms and Conditions of sale, including limitations of our liability, apply to all products and services sold.

Check Valves

» Pressures to 43,000 psi (2,965 bar)

O-Ring Check Valves

Maximator O-Ring Check Valves provide high quality directional flow control and tight shut-off for liquids and gases. All Check Valves are supplied with glands and collars. These Check Valves are not to be used as a relief device. The opening pressure of the O-Ring Check Valves is approx. 20 psi (1.5 bar).

» Materials:
Body, cover, poppet, cover gland: 316 stainless steel
Spring: 300 series stainless steel
O-Ring: FKM "A" [-4°F to 392°F(**-20°C to 200°C)**]

Ball Check Valves

Maximator Ball Check Valves prevent reverse flow where bubble tight shut-off is not mandatory. These Check Valves are designed with a ball cradled floating poppet to assure positive inline seating. This poppet design allows full flow around the ball to minimize pressure drop. Check Valves are rated to 660°F **(350°C)**. All Check Valves are supplied with glands and collars. These Check Valves are not to be used as a relief device. The opening pressure of the Ball Check Valves is approx. 20 psi (1.5 bar).

» Materials:
Body, cover, poppet, cover gland: 316L series stainless steel
Ball and Spring: 300 series stainless steel

Valve Pattern	Catalog Number	Connection Type	Pressure Rating psi (bar)	Orifice in. (mm)	Rated (Cv)	Dimensions in. (mm) A (Hex.)	Dimensions in. (mm) B
O-Ring Check Valves							
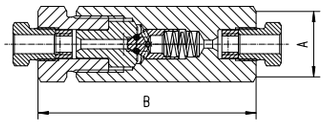	43OC16M	16MF	43,000 **(2,965)**	0.438 **(11.1)**	4.3	2.00 **(50.8)**	6.433 **(163.4)**
Ball Check Valves							
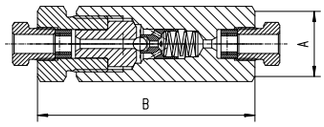	43BC16M	16MF	43,000 **(2,965)**	0.438 **(11.1)**	4.3	2.00 **(50.8)**	6.433 **(163.4)**

CAUTION: FREQUENT INSPECTIONS of O-Rings are necessary to ensure proper service of the check valve. O-Rings have shown satisfactory service life in testing, however different service conditions may lead to variations in cycle and shelf life. All dimensions are for reference only and subject to change.

All technical and dimensional information subject to change. All general Terms and Conditions of sale, including limitations of our liability, apply to all products and services sold.

Tubing and Coned and Threaded Nipples

» Pressures to 43,000 psi (2,965 bar)

High Pressure Tubing

Maximator offers a line of cold drawn thick wall tubing, with flow areas to compliment the 43,000 psi high pressure valves and fittings series. This tubing is made under strict manufacturing and quality control standards and inspections, with dimensional tolerances to match the requirements of the high pressure coned and threaded connections.

Tubing Tolerances

Normal Tubing Size in. (mm)	Tolerance O.D in. (mm)
1 **(25.4)**	0.995 / 0.990 **(25.273 / 25.174)**

Catalog Number	Tube Material	Fits Connection Type	Tube Size in. (mm)		Working Pressure psi (bar)				
			O.D.	I.D.	-325°F to 100°F (-198°C to 37°C)	200°F (93°C)	400°F (204°C)	600°F (315°C)	800°F (426°C)
43TU16M-316	316SS	16MF	1 **(25.4)**	0.438 **(11.1)**	43,000 **(2,965)**	38,700 **(2,670)**	35,830 **(2,470)**	32,480 **(2,240)**	31,050 **(2,140)**

All dimensions for reference only and are subject of change.

Coned and threaded nipples

Maximator offers a line of coned and threaded high pressure tube nipples in a variety of lengths for all standard tube sizes.

The coned and threaded high pressure tube nipples are available in 316 stainless steel. See chart below for ordering information.

Special length coned and threaded nipples are available upon request. Consult Maximator for availability and price.

Catalog Numbers are 316 Stainless Steel material Length in. (mm)				Fits Con-nection Type	Tube Size in. (mm)		Working Pressure at 100°F psi (bar)
6" (152.4)	8" (203.2)	10" (254)	12" (304.8)		O.D.	I.D.	
43N16M-6-316	43N16M-8-316	43N16M-10-316	43N16M-12-316	16MF	1 **(25.4)**	0.438 **(11.1)**	43,000 **(2,965)**

Standard nipples are not supplied with glands and collars, see Fittings on page 6 for these components.
See adjacent Tubing information, for pressure/temperature rating chart.

All dimensions are for reference only and subject to change.

All technical and dimensional information subject to change. All general Terms and Conditions of sale, including limitations of our liability, apply to all products and services sold.

High Pressure Valves

» Pressures to 65,000 psi (4,500 bar)

High pressure valves

Maximator high pressure valves with metal to metal seats have a high level of safety and reliability under adverse operating conditions. These valves may be used both with gases and liquids.

Traceability is ensured through extensively documented data (batch number, max. pressure, material number, type designation). All high pressure valves include glands and collars.

Ordering Information
Typical catalog number: 65V6H073

65 V Valve Series	6H O.D. Tube Size	07 Stem Type	3 Body Pattern	Options
65 V	**4H** – 1/4”	**07** – VEE stem	**1** – two-way straight	Extreme
	6H – 3/8”	**08** – REGULATING stem*	**2** – two-way angle	temperature
	9H – 9/16”	**87** – VEE stem with replaceable seat	**3** – three-way, two on pressure	option, see
		88 – REGULATING stem with replaceable seat*	**4** – three-way, one on pressure	information
			5 – three-way, two-stem manifold	below.

Options for High pressure valves

Special Designs for Extreme Temperatures
Standard valves are supplied with Teflon / Carbon packing and may be operated to 450°F **(230°C)**. High temperature packing and / or extended stuffing box are available for service from -423°F to 1200°F **(-252°C to 650°C)** by adding the following suffixes to catalog order number.

- **TG** – standard valve with teflon glass packing to 600°F **(315°C)**.
- **GY** – standard valve with graphite braided yarn packing to 800°F **(425°C)**.
- **HT** – extended stuffing box valve with graphite braided yarn packing to 1200°F **(650°C)**.
- **B** – standard valve with cryogenic trim materials and Teflon packing to -100°F **(-73°C)**.
- **LT** – extended stuffing box valve with teflon packing and cryogenic trim materials to -423°F **(-252°C)**.

O.D. Size in. (mm)	Connec-tion Type	Orifice Size in. (mm)	Rated Cv**	Pressure Rating @ R.T. psi (bar)***
1/4 **(6.35)**	4HF	0.062 **(1.6)**	0.08	65,000 **(4,500)**
3/8 **(9.53)**	6HF	0.062 **(1.6)**	0.09	65,000 **(4,500)**
9/16 **(14.30)**	9HF	0.078 **(2)**	0.14	65,000 **(4,500)**

Consult your MAXIMATOR representative for **repair kits** and valve bodies. Refer to the Technical Information section for proper maintenance procedures.

* tapered tip for regulating and shutoff

** Cv values shown are for 2-way straight pattern vee stem valves. For 2-way angle patterns, increase the Cv value by 50%.

*** See page 2 in the Technical Section for Pressure/Temperature Rating Chart.

All technical and dimensional information subject to change. All general Terms and Conditions of sale, including limitations of our liability, apply to all products and services sold.

Valve Pattern	Catalog Number	Stem Type	O.D. Tube in.	Orifice in. (mm)	Dimensions in. (mm) A	B	C	D	E	F	H	I	J	K	Valve Panel Hole	Block Thick-ness
2-Way Straight																
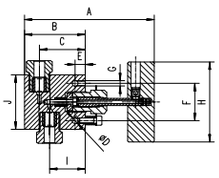	65V4H071	Vee	1/4	0.062	4.67	2.13	1.69	0.22	0.37	1.38	2.95	1.32	2.01		1.00	1.02
	65V4H081	Reg		(1,6)	(118.6)	(54.1)	(43)	(5.6)	(9.5)	(35)	(75)	(33.5)	(51)		(25.4)	(25.9)
	65V6H071	Vee	3/8	0.062	4.80	2.24	1.69	0.22	0.37	1.38	2.95	1.32	2.01		1.00	1.02
	65V6H081	Reg		(1,6)	(122)	(56.9)	(43)	(5.6)	(9.5)	(35)	(75)	(33.5)	(51)		(25.4)	(25.9)
	65V9H071	Vee	9/16	0.078	5.04	2.50	1.75	0.22	0.37	1.38	2.95	1.30	2.64		1.00	1.54
	65V9H081	Reg		(2)	(128)	(63.5)	(44.5)	(5.6)	(9.5)	(35)	(75)	(33)	(67)		(25.4)	(39.1)
2-Way Angle																
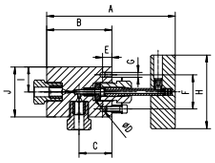	65V4H072	Vee	1/4	0.062	4.96	2.38	1.34	0.22	0.37	1.38	2.95	1.00	2.01		1.00	1.02
	65V4H082	Reg		(1,6)	(126)	(60.5)	(34)	(5.6)	(9.5)	(35)	(75)	(25.4)	(51)		(25.4)	(25.9)
	65V6H072	Vee	3/8	0.062	5.16	2.62	1.32	0.22	0.37	1.38	2.95	1.00	2.01		1.00	1.02
	65V6H082	Reg		(1,6)	(131)	(66.5)	(33.5)	(5.6)	(9.5)	(35)	(75)	(25.4)	(51)		(25.4)	(25.9)
	65V9H072	Vee	9/16	0.078	5.35	2.80	1.32	0.22	0.37	1.38	2.95	1.32	2.64		1.00	1.54
	65V9H082	Reg		(2)	(136)	(71.1)	(33.5)	(5.6)	(9.5)	(35)	(75)	(33.5)	(67)		(25.4)	(39.1)
3-Way / 2 on Pressure																
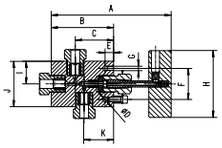	65V4H073	Vee	1/4	0.062	4.96	2.38	1.69	0.22	0.37	1.38	2.95	1.00	2.01	1.12	1.00	1.02
	65V4H083	Reg		(1,6)	(126)	(60.5)	(43)	(5.6)	(9.5)	(35)	(75)	(25.4)	(51)	(28.5)	(25.4)	(25.9)
	65V6H073	Vee	3/8	0.062	5.33	2.76	1.69	0.22	0.37	1.38	2.95	1.00	2.01	1.12	1.00	1.02
	65V6H083	Reg		(1,6)	(133.5)	(70.1)	(43)	(5.6)	(9.5)	(35)	(75)	(25.4)	(51)	(28.5)	(25.4)	(25.9)
	65V9H073	Vee	9/16	0.078	5.71	3.15	1.75	0.22	0.37	1.38	2.95	1.32	2.64	1.12	1.00	1.54
	65V9H083	Reg		(2)	(145)	(80)	(44.5)	(5.6)	(9.5)	(35)	(75)	(33.5)	(67)	(28.5)	(25.4)	(39.1)
3-Way / 1 on Pressure																
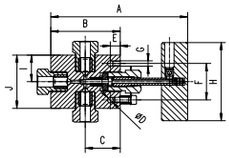	65V4H074	Vee	1/4	0.062	4.96	2.38	1.32	0.22	0.37	1.38	2.95	1.00	2.01		1.00	1.02
	65V4H084	Reg		(1,6)	(126)	(60.5)	(33.5)	(5.6)	(9.5)	(35)	(75)	(25.4)	(51)		(25.4)	(25.9)
	65V6H074	Vee	3/8	0.062	5.16	2.62	1.32	0.22	0.37	1.38	2.95	1.00	2.01		1.00	1.02
	65V6H084	Reg		(1,6)	(131)	(66.5)	(33.5)	(5.6)	(9.5)	(35)	(75)	(25.4)	(51)		(25.4)	(25.9)
	65V9H074	Vee	9/16	0.078	5.35	2.80	1.32	0.22	0.37	1.38	2.95	1.32	2.64		1.00	1.54
	65V9H084	Reg		(2)	(136)	(71.1)	(33.5)	(5.6)	(9.5)	(35)	(75)	(33.5)	(67)		(25.4)	(39.1)
3-Way / 2-Stem Manifold																
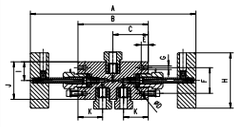	65V4H075	Vee	1/4	0.062	8.56	3.44	1.72	0.22	0.37	1.38	2.95	1.00	2.01	1.12	1.00	1.02
	65V4H085	Reg		(1,6)	(217.4)	(87.4)	(43.7)	(5.6)	(9.5)	(35)	(75)	(25.4)	(51)	(28.5)	(25.4)	(25.9)
	65V6H075	Vee	3/8	0.062	8.56	3.76	189	0.22	0.37	1.38	2.95	1.00	2.01	1.12	1.00	1.02
	65V6H085	Reg		(1,6)	(217.4)	(95.5)	(48)	(5.6)	(9.5)	(35)	(75)	(25.4)	(51)	(28.5)	(25.4)	(25.9)
	65V9H075	Vee	9/16	0.078	9.25	4.13	2.07	0.22	0.37	1.38	2.95	1.32	2.64	1.12	1.00	1.54
	65V9H085	Reg		(2)	(235)	(105)	(52.6)	(5.6)	(9.5)	(35)	(75)	(33.5)	(67)	(28.5)	(25.4)	(39.1)
2-Way Angle / Replaceable Seat																
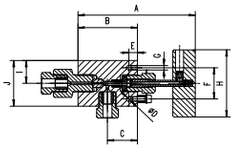	65V4H872	Vee	1/4	0.062	5.16	2.62	1.32	0.22	0.37	1.38	2.95	1.00	2.01		1.00	1.02
	65V4H882	Reg		(1,6)	(131)	(66.5)	(33.5)	(5.6)	(9.5)	(35)	(75)	(25.4)	(51)		(25.4)	(25.9)
	65V6H872	Vee	3/8	0.062	5.16	2.62	1.32	0.22	0.37	1.38	2.95	1.00	2.01		1.00	1.02
	65V6H882	Reg		(1,6)	(131)	(66.5)	(33.5)	(5.6)	(9.5)	(35)	(75)	(25.4)	(51)		(25.4)	(25.9)
	65V9H872	Vee	9/16	0.078	5.16	2.62	1.32	0.22	0.37	1.38	2.95	1.32	2.64		1.00	1.54
	65V9H882	Reg		(2)	(131)	(66.5)	(33.5)	(5.6)	(9.5)	(35)	(75)	(33.5)	(67)		(25.4)	(39.1)

G - Panel mounting screw thread size 10-24 UNC (screw included). All dimensions are for reference only and are subject to change.

All technical and dimensional information subject to change. All general Terms and Conditions of sale, including limitations of our liability, apply to all products and services sold.

High Pressure Fittings

» Pressures to 65,000 psi (4,500 bar)

High pressure fittings

Maximator high pressure fittings are designed to be used with the 36V and 65V series high pressure valves and high pressure tubing. All high pressure fittings have coned and threaded type connections. Mounting holes are standard on all elbows, tees and crosses.

Tubing Size	Gland	Collar	Plug	Tubing Cap
			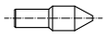	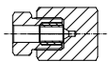
1/4	65G4H	65C4H	65P4H	65TC4H
3/8	65G6H	65C6H	65P6H	65TC6H
9/16	65G9H	65C9H	65P9H	65TC9H

Connection Components

All high pressure fittings are supplied with glands and collars. Refer to the adjacent chart for ordering any of the connection components individually. When using the plug, the collar is not needed.

Fitting Pattern	Catalog Number	Connection Type	O.D. Tube Size in.	Orifice in. (mm)	Dimensions in. (mm) A	B	C	D	E	F	G	Block Thick-ness
Elbow												
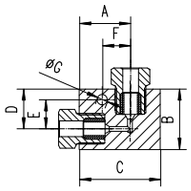	65L4H	4HF	1/4	0.094 **(2.3)**	0.89 **(22.6)**	1.02 **(25.9)**	1.54 **(39.1)**	0.63 **(16)**	0.46 **(11.7)**	0.65 **(16.5)**	0.22 **(5.6)**	1.02 **(25.9)**
	65L6H	6HF	3/8	0.125 **(3.2)**	1.26 **(32)**	1.50 **(38.1)**	2.01 **(51)**	0.98 **(24.9)**	0.72 **(18.3)**	0.69 **(17.5)**	0.26 **(6.6)**	1.02 **(25.9)**
	65L9H	9HF	9/16	0.188 **(4.8)**	1.89 **(48)**	1.89 **(48)**	2.64 **(67)**	1.10 **(28)**	0.83 **(21.1)**	0.94 **(23.9)**	0.33 **(8.4)**	1.54 **(39.1)**
Tee												
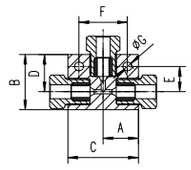	65T4H	4HF	1/4	0.094 **(2.3)**	1.00 **(25.4)**	1.26 **(32)**	2.01 **(51)**	0.89 **(22.6)**	0.46 **(11.7)**	1.30 **(33)**	0.22 **(5.6)**	1.02 **(25.9)**
	65T6H	6HF	3/8	0.125 **(3.2)**	1.00 **(25.4)**	1.57 **(39.9)**	2.01 **(51)**	1.06 **(26.9)**	0.72 **(18.3)**	1.38 **(35)**	0.26 **(6.6)**	1.02 **(25.9)**
	65T9H	9HF	9/16	0.188 **(4.8)**	1.32 **(33.5)**	2.13 **(54.1)**	2.64 **(67)**	1.38 **(35)**	0.83 **(21.1)**	1.89 **(48)**	0.33 **(8.4)**	1.54 **(39.1)**

See page 2 in the Technical Section for pressure/temperature rating chart.
All dimensions are for reference only and are subject to change.

All technical and dimensional information subject to change. All general Terms and Conditions of sale, including limitations of our liability, apply to all products and services sold.

Fitting Pattern	Catalog Number	Connection Type	O.D. Tube Size in.	Orifice in. (mm)	Dimensions in. (mm) A	B	C	D	E	F	G	Block Thick-ness
Cross												
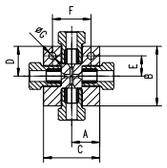	65X4H	4HF	1/4	0.094 **(2.3)**	1.00 **(25.4)**	1.26 **(32)**	2.01 **(51.1)**	0.63 **(16)**	0.46 **(11.7)**	1.30 **(33)**	0.22 **(5.6)**	1.02 **(25.9)**
	65X6H	6HF	3/8	0.125 **(3.2)**	1.00 **(25.4)**	2.13 **(54.1)**	2.01 **(51.1)**	1.06 **(27)**	0.72 **(18.3)**	1.38 **(35)**	0.26 **(6.6)**	1.02 **(25.9)**
	65X9H	9HF	9/16	0.188 **(4.8)**	1.32 **(33.5)**	2.76 **(70.1)**	2.64 **(67)**	1.38 **(35)**	0.83 **(21.1)**	1.89 **(48)**	0.33 **(8.4)**	1.54 **(39.1)**
Straight Coupling / Union Coupling												
Straight Coupling 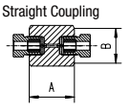 Union Coupling 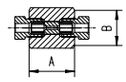	65F4H	4HF	1/4	0.094 **(2.3)**	1.38 **(35)**	1.06 **(27)**	Straight Coupling					
	65UF4H						Union Coupling					
	65F6H	6HF	3/8	0.125 **(3.2)**	1.77 **(45)**	1.06 **(27)**	Straight Coupling					
	65UF6H						Union Coupling					
	65F9H	9HF	9/16	0.188 **(4.8)**	2.19 **(55.6)**	1.44 **(36.6)**	Straight Coupling					
	65UF9H						Union Coupling					
Bulkhead Coupling												
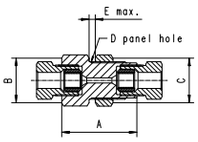	65BF4H	4HF	1/4	0.094 **(2.3)**	1.89 **(48)**	1.06 **(27)**	1.06 **(27)**	0.94 **(23.9)**	0.16 **(4)**			
	65BF6H	6HF	3/8	0.125 **(3.2)**	2.38 **(60.5)**	1.44 **(36.5)**	1.44 **(36.5)**	1.12 **(28.5)**	0.35 **(8.9)**			
	65BF9H	9HF	9/16	0.188 **(4.8)**	2.76 **(70.1)**	1.63 **(41.3)**	1.63 **(41.3)**	1.43 **(36.3)**	0.67 **(17)**			
Manifold Block												
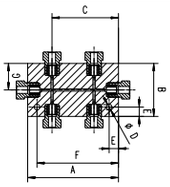	65MB64H	4HF	1/4	0.094 **(2.3)**	3.44 **(87.5)**	2.01 **(51.1)**	2.52 **(64)**	0.22 **(5.5)**	0.35 **(8.9)**	3.09 **(78.5)**	1.0 **(25.5)**	1.02 **(25.9)**
	65MB66H	6HF	3/8	0.125 **(3.2)**	3.76 **(95.5)**	2.01 **(51.1)**	2.66 **(67.5)**	0.26 **(6.5)**	0.35 **(8.9)**	3.41 **(86.5)**	1.0 **(25.5)**	1.02 **(25.9)**
	65MB69H	9HF	9/16	0.188 **(4.8)**	5.12 **(130)**	2.64 **(67)**	3.74 **(95)**	0.33 **(8.5)**	0.37 **(9.5)**	4.74 **(120.5)**	1.32 **(33.5)**	1.54 **(39.1)**

See page 2 in the Technical Section for pressure/temperature rating chart.
All dimensions are for reference only and are subject to change.

All technical and dimensional information subject to change. All general Terms and Conditions of sale, including limitations of our liability, apply to all products and services sold.

Anti-Vibration Collet Gland Assembly

» Pressures to 65,000 psi (4,500 bar)

Anti-vibration collet gland assemblies

Maximator anti-vibration collet gland assemblies are for use in applications where there could be extreme external mechanical vibrations or shock in tubing lines. These collet gland assemblies are interchangeable with the standard high pressure coned and threaded tube connections.

In a normal coned and threaded tube connection, any external mechanical loading on the tubing lines, valves or fittings, would be concentrated on the first thread of the tube. This can cause failure of the tube at this thinner cross-section. The anti-vibration collet gland assembly grips the tube behind the connection, supporting the tube at the full cross-section and straight area, moving the loading away from the threaded area.

The anti-vibration collet gland assembly, when tightened properly, compresses a split collet on the tube, providing the beneficial gripping action. All anti-vibration collet gland assemblies come with a Molybdenum Disulfide Coating to guard against galling of the stainless components.

Gland Pattern	Catalog Number	Part	O.D. Tubing Size in.	Dimensions in. (mm) A	Dimensions in. (mm) B (Hex.)
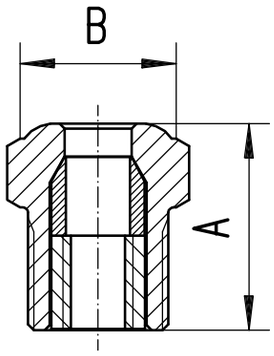	65AVA4H	Complete Assembly	1/4	0.83 **(21.1)**	0.62 **(15.7)**
	65AVFC4H	Flat Collar			
	65AVC4H	Slotted Collet			
	65AVG4H	Gland Nut			
	65AVA6H	Complete Assembly	3/8	1.16 **(29.5)**	0.81 **(20.6)**
	65AVFC6H	Flat Collar			
	65AVC6H	Slotted Collet			
	65AVG6H	Gland Nut			
	65AVA9H	Complete Assembly	9/16	1.50 **(38)**	1.19 **(30.2)**
	65AVFC9H	Flat Collar			
	65AVC9H	Slotted Collet			
	65AVG9H	Gland Nut			

All dimensions are for reference only and are subject to change.

All technical and dimensional information subject to change. All general Terms and Conditions of sale, including limitations of our liability, apply to all products and services sold.

Check Valves

» Pressures to 65,000 psi (4,500 bar)

O-Ring Check Valves

Maximator O-Ring Check Valves provide high quality directional flow control and tight shut-off for liquids and gases. All Check Valves are supplied with glands and collars. These Check Valves are not to be used as a relief device. The opening pressure of the O-Ring Check Valves is approx. 20 psi (1.5 bar).

» Materials:
Body, cover, poppet, cover gland: 316 stainless steel
Spring: 300 series stainless steel
O-Ring: FKM "A" [-4°F to 392°F(**-20°C to 200°C)**]

Ball Check Valves

Maximator Ball Check Valves prevent reverse flow where bubble tight shut-off is not mandatory. These Check Valves are designed with a ball cradled floating poppet to assure positive inline seating. This poppet design allows full flow around the ball to minimize pressure drop. Check Valves are rated to 660°F. **(350°C)**. All Check Valves are supplied with glands and collars. These Check Valves are not to be used as a relief device. The opening pressure of the Ball Check Valves is approx. 20 psi (1.5 bar).

» Materials:
Body, cover, poppet, cover gland: 316L series stainless steel
Ball and Spring: 300 series stainless steel

Valve Pattern	Catalog Number	Connection Type	Pressure Rating psi (bar)	Orifice in. (mm)	Rated (Cv)	Dimensions in. (mm) A (Hex.)	B
O-Ring Check Valves							
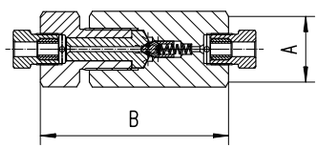	650C4H	4HF	65,000 **(4,500)**	0.094 **(2.3)**	0.15	1.19 **(30.2)**	3.40 **(86.4)**
	650C6H	6HF	65,000 **(4,500)**	0.125 **(3.2)**	0.28	1.19 **(30.2)**	3.81 **(96.8)**
	650C9H	9HF	65,000 **(4,500)**	0.188 **(4.8)**	0.63	1.63 **(41.4)**	4.61 **(117.1)**
Ball Check Valves							
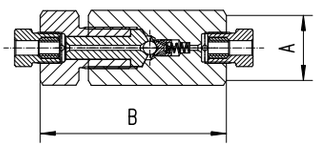	65BC4H	4HF	65,000 **(4,500)**	0.094 **(2.3)**	0.15	1.19 **(30.2)**	3.40 **(86.4)**
	65BC6H	6HF	65,000 **(4,500)**	0.125 **(3.2)**	0.28	1.19 **(30.2)**	3.81 **(96.8)**
	65BC9H	9HF	65,000 **(4,500)**	0.188 **(4.8)**	0.63	1.63 **(41.4)**	4.61 **(117.1)**

CAUTION: FREQUENT INSPECTIONS of O-Rings are necessary to ensure proper service of the check valve. O-Rings have shown satisfactory service life in testing, however different service conditions may lead to variations in cycle and shelf life. All dimensions are for reference only and subject to change.

All technical and dimensional information subject to change. All general Terms and Conditions of sale, including limitations of our liability, apply to all products and services sold.

Line Filters

» Pressures to 65,000 psi (4,500 bar)

Dual-Disc Line Filters

Maximator Dual-Disc Line Fillters are used to filter process fluids in high pressure systems. This design helps remove the large particles first through a coarse primary disc, which then allows a secondary disc to provide a smaller micron filtration. These filter elements are designed to withstand pressure surges without cracking, flaking, or rupturing. Filter elements come standard in the following micron sizes: 5/8, 8/30, 30/56 (secondary/primary). Filters are rated for temperatures from -423°F to 660°F **(-252°C to 350°C).** All Line Fillters come with glands and collars.

» Materials:

Body, cover, cover gland: 316 series stainless steel
Element: 316 series stainless steel

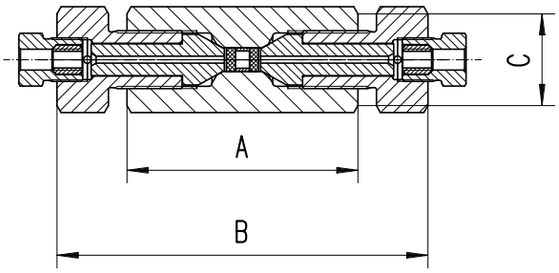

Cup-Type Line Filters

Maximator Cup-Type Line Filters are used when maximum filtration surface area and a single micron size element is preferred. This design increases the filter area as much as 6 times the area of the disc type filter, and will permit higher flow rates with a lower pressure drop, and longer intervals between element changes. Filter elements come standard in 5, 30, or 56 micron sizes and are easily replaced. Filters are rated for temperatures from -423°F to 660°F **(-252°C to 350°C).** All line filters come with glands and collars.

» Materials:

Body, cover, cover gland: 316 series stainless steel
Element: 316 series stainless steel

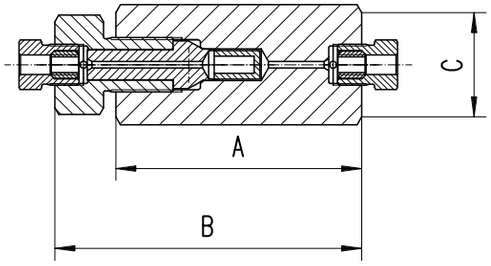

Catalog Number	Pressure Rating psi (bar)	Orifice in. (mm)	Micron Size	Connection Type	Filter Element Area in.² (mm)²	Dimensions in. (mm) A	B	C (Hex.)
Dual-Disc Line Filters								
65DF4H-5/8	65,000 **(4,500)**	0.094 **(2.3)**	5/8	4HF	0.07 **(50)**	2.99 **(76)**	4.8 **(121,9)**	1.19 **(30.2)**
65DF4H-8/30			8/30					
65DF4H-30/56			30/56					
65DF6H-5/8	65,000 **(4,500)**	0.125 **(3.2)**	5/8	6HF	0.07 **(50)**	2.99 **(76)**	5.29 **(134.4)**	1.19 **(30.2)**
65DF6H-8/30			8/30					
65DF6H-30/56			30/56					
65DF9H-5/8	65,000 **(4,500)**	0.188 **(4.8)**	5/8	9HF	0.15 **(95)**	3.39 **(86.1)**	5.75 **(146)**	1.44 **(36.6)**
65DF9H-8/30			8/30					
65DF9H-30/56			30/56					
Cup-Type Line Filters								
65CF4H-5	65,000 **(4,500)**	0.094 **(2.3)**	5	4HF	0.82 **(530)**	3.39 **(86.1)**	4.25 **(108)**	1.44 **(36.6)**
65CF4H-30			30					
65CF4H-56			56					
65CF6H-5	65,000 **(4,500)**	0.125 **(3.2)**	5	6HF	0.82 **(530)**	3.39 **(86.1)**	4.44 **(112.8)**	1.44 **(36.6)**
65CF6H-30			30					
65CF6H-56			56					
65CF9H-5	65,000 **(4,500)**	0.188 **(4.8)**	5	9HF	0.82 **(530)**	4.06 **(103.1)**	5.28 **(134.1)**	1.63 **(41.3)**
65CF9H-30			30					
65CF9H-56			56					

It is recommended that all fluids entering a high pressure system be thoroughly cleaned.
Maximator filters are designed to remove small amounts of process particles. Pressure differential should not exceed 1000 psi across the filter elements.
All dimensions for reference only and are subject to change.

All technical and dimensional information subject to change. All general Terms and Conditions of sale, including limitations of our liability, apply to all products and services sold.

Angle Filters

» Pressures to 65,000 psi (4,500 bar)

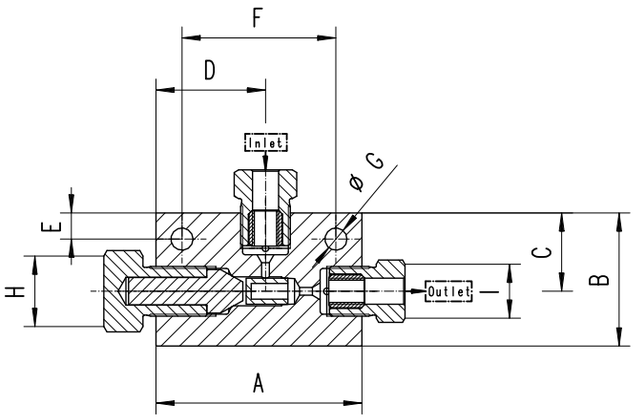

Angel Filters

Maximator angle filters are used to filter gases or liquids in high pressure systems. The filter elements can be easily changed in-situ. The special design allows the exchange of the filter element without the need to first disassemble the filter in front of the tubing. Filter elements are made of sintered material with pore sizes of 5 µm, 30 µm or 56 µm. Filters are rated for temperatures from -423°F to 660°F **(-252°C to 350°C)**. All angle filters come with glands and collars.

» Material:
Body, cover, cover gland: 316L series stainless steel
Element: 316 stainless steel

Catalog Number	Pressure Rating psi (bar)	Orifice in. (mm)	Connection Type	Micron Size	Filter Element Areas in.^{2} (mm^2)	Dimensions in. (mm) A	B	C	D	E	F	G	H (Hex.)	I (Hex.)	Block thickness
Angle Filter															
65AF4H-5	65,000 **(4,500)**	0.094 **(2.3)**	4H	5	0.82 **(530)**	2.80 **(71)**	2.01 **(51)**	1.18 **(30)**	1.65 **(42)**	0.39 **(10)**	2.01 **(51)**	0.34 **(8.5)**	1.06 **(27)**	0.63 **(15.9)**	1.02 **(26)**
65AF4H-30				30											
65AF4H-56				56											
65AF6H-5	65,000 **(4,500)**	0.125 **(3.2)**	6H	5	0.82 **(530)**	3.11 **(79)**	2.01 **(51)**	1.18 **(30)**	1.65 **(42)**	0.39 **(10)**	2.32 **(59)**	0.34 **(8.5)**	1.06 **(27)**	0.81 **(20.7)**	1.02 **(26)**
65AF6H-30				30											
65AF6H-56				56											
65AF9H-5	65,000 **(4,500)**	0.188 **(4.8)**	9H	5	0.82 **(530)**	3.23 **(82)**	2.64 **(67)**	1.32 **(33.5)**	1.65 **(42)**	0.39 **(10)**	2.44 **(62)**	0.34 **(8.5)**	1.06 **(27)**	1.19 **(30.2)**	1.54 **(39)**
65AF9H-30				30											
65AF9H-56				56											

It is recommended that all fluids entering a high pressure system be thoroughly cleaned.
Maximator filters are designed to remove small amounts of process particles. Pressure differential should not exceed 1000 psi across the filter elements.
All dimensions for reference only and are subject to change.

All technical and dimensional information subject to change. All general Terms and Conditions of sale, including limitations of our liability, apply to all products and services sold.

Safety Head Assembly

» Pressures to 65,000 psi (4,500 bar)

Safety head assemblies

Maximator safety head assemblies are used to provide over-pressure protection to high pressure systems. These safety head assemblies are to be used with the appropriate 1/4” angular rupture disc listed in the chart below.

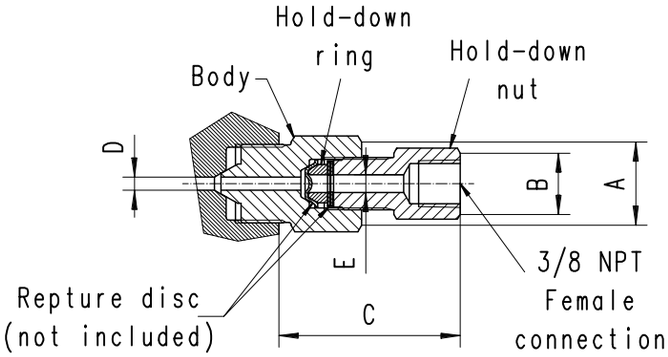

Safety Head Assembly Catalog Number without Disc	Fits Connection Type	Pressure Rating psi (bar)	Body Torque ft - lbs. (Nm)	Dimensions in. (mm) A (Hex.)	B (Hex.)	C (LG.)	D (I.D.)	E (I.D.)
65SH4H	4HF	65,000 **(4,500)**	25 **(35)**	1.06 **(26.9)**	0.88 **(22.4)**	2.57 **(65.3)**	0.083 **(2.31)**	0.250 **(6.3)**
65SH6H	6HF	65,000 **(4,500)**	50 **(70)**	1.06 **(26.9)**	0.88 **(22.4)**	2.54 **(64.5)**	0.125 **(3.2)**	0.250 **(6.3)**
65SH9H	9HF	65,000 **(4,500)**	110 **(150)**	1.19 **(30.2)**	0.88 **(22.4)**	2.48 **(63)**	0.188 **(4.7)**	0.250 **(6.3)**

All dimensions for reference only and are subject of change

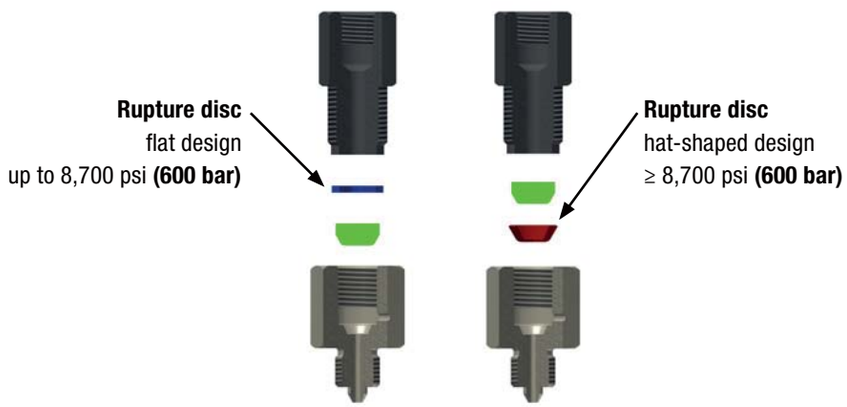

All technical and dimensional information subject to change. All general Terms and Conditions of sale, including limitations of our liability, apply to all products and services sold.

Rupture Discs

» Pressures to 65,000 psi (4,500 bar)

1/4“ Rupture discs

1/4“ angular and flat seat rupture discs are designed to be used with the safety head assemblies that are shown on page 18. Minimum rupture disc pressure ratings should be at least 110% of system operating pressure. The standard material is stainless steel. The pressure ranges indicated in the table below are at room temperature (72°F).Other materials and pressure ranges are available upon request.

Catalog Number	Pressure range psi (bar)
RD-1200	1,164 - 1,272 **(80.3 - 87.7)**
RD-1500	1,455 - 1,590 **(99.7 - 109.7)**
RD-1750	1,697 - 1,855 **(117 - 127.9)**
RD-2000	1,940 - 2,120 **(133.8 - 146.2)**
RD-2500	2,425 - 2,650 **(167.2 - 182.8)**
RD-3000	2,910 - 3,180 **(200.7 - 219.3)**
RD-3500	3,395 - 3,710 **(234.1 - 255.9)**
RD-4000	3,880 - 4,240 **(267.6-292.4)**
RD-4500	4,365 - 4,770 **(301 - 329)**
RD-5000	4,850 - 5,300 **(334.5 - 365.5)**
RD-5500	5,335 - 5,830 **(367.9 - 402.1)**
RD-6000	5,820 - 6,360 **(401.4 - 438.6)**
RD-6500	6,305 - 6,890 **(434.8 - 475.2)**

Catalog Number	Pressure range psi (bar)
RD-7000	6,790 - 7,420 **(468.3 - 511.7)**
RD-7500	7,275 - 7,950 **(501.7 - 548.3)**
RD-8000	7,760 - 8,480 **(535.2 - 584.8)**
RD-8500	8,245 - 9,010 **(568.6 - 621.4)**
RD-9000	8,730 - 9,540 **(602.1 - 657.9)**
RD-9500	9,215 - 10,070 **(635.5 - 694.5)**
RD-10000	9,700 - 10,600 **(669 - 731)**
RD-11000	10,670 -11,660 **(735.9 - 804.1)**
RD-12000	11,640 -12,720 **(802.8 - 877.2)**
RD-13000	12,610 - 13,780 **(869.7 - 950.3)**
RD-14000	13,580 - 14,840 **(936.6 - 1023.4)**
RD-15000	14,550 - 15,900 **(1,003.4 - 1,096.6)**
RD-16000	15,520 -16,960 **(1,070.3 - 1,169.7)**

Catalog Number	Pressure range psi (bar)
RD-17000	16,490 - 18,020 **(1,137.2 - 1,242.8)**
RD-18000	17,460 - 19,080 **(1,204.1 - 1,315.9)**
RD-19000	18,430 - 20,140 **(1,271 - 1,389)**
RD-20000	19,400 - 21,200 **(1,337.9 - 1,462.1)**
RD-21000	20,370 - 22,260 **(1,404.8 - 1,535.2)**
RD-22000	21,340 - 23,320 **(1,471.7 - 1,608.3)**
RD-23000	22,310 - 24,380 **(1,538.6 - 1,681.4)**
RD-24000	23,280 - 25,440 **(1,605.5 - 1,754.5)**
RD-25000	24,250 - 26,500 **(1,672.4 - 1,827.6)**
RD-26000	25,220 - 27,560 **(1,739.3 - 1,900.7)**
RD-27000	26,190 - 28,620 **(1,806.2 - 1,973.8)**
RD-28000	27,160 - 29,680 **(1,873.1 - 2,046.9)**
RD-29000	28,130 - 30,740 **(1,940 - 2,120)**

Catalog Number	Pressure range psi (bar)
RD-30000	29,100 -31,800 **(2,006.9 - 2,193.1)**
RD-32500	31,525 - 34,450 **(2,174.1 - 2,375.9)**
RD-35000	33,950 - 37,100 **(2,341.4 - 2,558.6)**
RD-37500	36,375 - 39,750 **(2,508.6 - 2,741.4)**
RD-40000	38,880 - 42,400 **(2,681.4 - 2,924.1)**
RD-42500	41,255 - 45,050 **(2,845.2 - 3,106.9)**
RD-45000	43,650 - 47,700 **(3,010.3 - 3,289.7)**
RD-47500	46,075 - 50,350 **(3,177.6 - 3,472.4)**
RD-50000	48,500 - 53,000 **(3,344.8 - 3,655.2)**
RD-55000	53,350 - 58,300 **(3,679.3 - 4,020.7)**
RD-60000	58,200 - 63,600 **(4,013.8 - 4,386.2)**
RD-67500	65,475 - 71,550 **(4,515.5 - 4,934.5)**
RD-70000	67,900 - 74,200 **(4,682.8 - 5,117.2)**

Rupture Discs are individually packed and marked type plate.

All technical and dimensional information subject to change. All general Terms and Conditions of sale, including limitations of our liability, apply to all products and services sold.

Relief Valves

» Pressures to 65,000 psi (4,500 bar)

Relief Valves

Maximator High Pressure Relief Valves with metal seat provide reliable venting of liquids for set pressure from 14,500 psi (1.000 bar) up to 65,000 psi (4,500 bar). The relief valves are intended to be used as an adjustable pressure relief device actuated by inlet static pressure having a gradual lift generally proportional to the increase in pressure over opening pressure.
All relief valves are ATEX (CE Ex II 2D/2G IIC c TX) approved, have a 1/4“ NPT relief connection, are equipped with a replaceable seat and come with glands and collars.

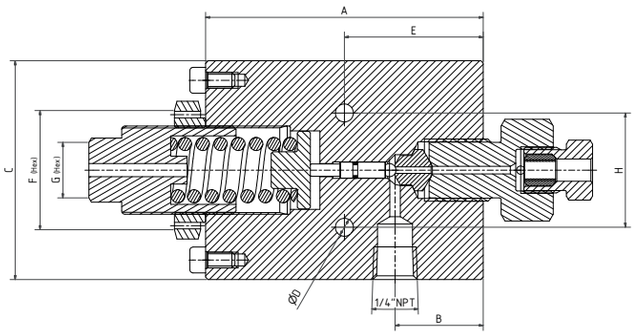

Materials:
Body, double cone: 316 stainless steel
Spring: 300 series stainless steel
O-ring: FKM “A” [-4°F to 392°F (**-20°C to 200°C**)]

Catalog Number	Pressure Rating psi (bar)	Pressure Range min./max. psi (bar)	Orifice in. (mm)	Connection Type	Dimensions in. (mm) A	B	C	D	E	F (Hex.)	G (Hex.)	H	Block thick-ness
36RV4H	36,000 **(2,500)**	14,500 / 36,000 **(1.000 / 2,500)**	0,08 **(2.0)**	4HF	3.35 **(85)**	1.06 **(27)**	2.64 **(67)**	0.28 **(5.5)**	1.67 **(42.5)**	1.44 **(36.5)**	0.67 **(17)**	1.38 **(35)**	1.54 **(39)**
36RV6H	36,000 **(2,500)**	14,500 / 36,000 **(1.000 / 2,500)**	0,08 **(2.0)**	6HF	3.35 **(85)**	1.06 **(27)**	2.64 **(67)**	0.28 **(5.5)**	1.67 **(42.5)**	1.44 **(36.5)**	0.67 **(17)**	1.38 **(35)**	1.54 **(39)**
65RV4H	65,000 **(4,500)**	29,000 / 65,000 **(2,000 / 4,500)**	0,06 **(1.5)**	4HF	3.35 **(85)**	1.06 **(27)**	2.64 **(67)**	0.28 **(5.5)**	1.67 **(42.5)**	1.44 **(36.5)**	0.67 **(17)**	1.38 **(35)**	1.54 **(39)**
65RV6H	65,000 **(4,500)**	29,000 / 65,000 **(2,000 / 4,500)**	0,06 **(1.5)**	6HF	3.35 **(85)**	1.06 **(27)**	2.64 **(67)**	0.28 **(5.5)**	1.67 **(42.5)**	1.44 **(36.5)**	0.67 **(17)**	1.38 **(35)**	1.54 **(39)**

All dimensions for reference only and are subject of change

All technical and dimensional information subject to change. All general Terms and Conditions of sale, including limitations of our liability, apply to all products and services sold.

High Pressure Tubing

» Pressures to 65,000 psi (4,500 bar)

High Pressure Tubing

Maximator offers a line of cold drawn thick wall tubing, with flow areas to compliment the high pressure valves and fittings. This tubing is made under strict manufacturing and quality control standards and inspections, with dimensional tolerances to match the requirements of the high pressure coned and threaded connections.

The standard materials are 304 and 316 stainless steels. Other materials may be provided on special request, depending on the specific material, diameters and lengths.

Tubing Tolerances

Normal Tubing Size in. (mm)	Tolerance O.D in. (mm)
1/4 **(6.35)**	0.248 / 0.243 **(6.299 / 6.172)**
3/8 **(9.53)**	0.370 / 0.365 **(9.398 / 9.271)**
9/16 **(14.29)**	0.557 / 0.552 **(14.147 / 14.021)**

Catalog Number	Tube Material	Fits Connection Type	Tube Size in. (mm) O.D.	Tube Size in. (mm) I.D.	Working Pressure psi (bar) -325°F to 100°F (-198°C to 37°C)	200°F (93°C)	400°F (204°C)	600°F (315°C)	800°F (426°C)
65TU4H-316	316SS	4HF	1/4 **(6.35)**	0.083 **(2.11)**	65,000 **(4,500)**	58,500 **(4,050)**	53,950 **(3,750)**	49,400 **(3,400)**	46,800 **(3,250)**
65TU4H-304	304SS								
65TU6H-316	316SS	6HF	3/8 **(9.53)**	0.125 **(3.18)**	65,000 **(4,500)**	58,500 **(4,050)**	53,950 **(3,750)**	49,400 **(3,400)**	46,800 **(3,250)**
65TU6H-304	304SS								
65TU9H-316	316SS	9HF	9/16 **(14.29)**	0.188 **(4.77)**	65,000 **(4,500)**	58,500 **(4,050)**	53,950 **(3,750)**	49,400 **(3,400)**	46,800 **(3,250)**
65TU9H-304	304SS								

All dimensions for reference only and are subject of change.

All technical and dimensional information subject to change. All general Terms and Conditions of sale, including limitations of our liability, apply to all products and services sold.

Coned and Threaded Nipples

» Pressures to 65,000 psi (4,500 bar)

Coned and threaded nipples

Maximator offers a line of coned and threaded high pressure tube nipples in a variety of lengths for all standard tube sizes.

The coned and threaded high pressure tube nipples are available in 316 stainless steel. See chart below for ordering information.

Special length coned and threaded nipples are available upon request. Consult Maximator for availability and price.

Catalog Numbers are 316 Stainless Steel material Length in. (mm)							Fits Con-nection Type	Tube Size in. (mm)		Working Pressure at 100°F psi (bar)
2.75" (69.85)	3" (76.2)	4" (101.6)	6" (152.4)	8" (203.2)	10" (254)	12" (304.8)		O.D.	I.D.	
65N4H-2.75-316	65N4H-3-316	65N4H-4-316	65N4H-6-316	65N4H-8-316	65N4H-10-316	65N4H-12-316	4HF	1/4	0.083 **(2.11)**	65,000 **(4,500)**
	65N6H-3-316	65N6H-4-316	65N6H-6-316	65N6H-8-316	65N6H-10-316	65N6H-12-316	6HF	3/8	0.125 **(3.17)**	65,000 **(4,500)**
		65N9H-4-316	65N9H-6-316	65N9H-8-316	65N9H-10-316	65N9H-12-316	9HF	9/16	0.188 **(4.77)**	65,000 **(4,500)**

Standard nipples are not supplied with glands and collars, see Fittings on page 6 for these components.
See adjacent Tubing page 21, for pressure/temperature rating chart.

All dimensions are for reference only and subject to change.

All technical and dimensional information subject to change. All general Terms and Conditions of sale, including limitations of our liability, apply to all products and services sold.

Ultra High Pressure Valves, Fittings and Tubing

» Pressures to 152,000 psi (10,500 bar)

MAXIMATOR has been designing and manufacturing high pressure equipment for more than thirty years and has a worldwide reputation for quality and reliability, backed by one of the best service organizations in the industry.

Pipe Valves feature:

- Rising stem design.
- High Strenght Stainless Steel wetted parts with a 17-4 PH stem provides excellent corrosion resistance.
- Metal-to-metal seating achieves bubble-tight shut-off, longer stem and seat life, greater durability for repeated open and close cycles.
- PTFE and carbon packing with metal back-up rings offers reliable stem to body sealing.
- Non-rotating stem prevents stem to seat galling.
- Stem sleeve and packing gland materials have been selected to achieve optimum thread cycle life and reduced handle torque. All stem sleeve threads are rolled, assuring smooth operation.
- Safety weep holes for all pressure connections and packing areas.
- Three different valve body patterns, with vee type stem tip.

MAXIMATOR offers a complete line of high pressure valves, fittings and tubing.

Note: When selecting multiple items, the pressure rating would be that of the lowest rated component.

Ultra High Pressure Index	Page:
Valves rated to 101,000 psi **(7,000 bar)**	2 – 3
Ultra High Pressure Fittings rated to 101,000 psi **(7,000 bar)**	4 – 5
Tubing & Coned and Threaded Nipples rated to 101,000 psi **(7,000 bar)**	6 – 7
Fittings rated to 152,000 psi **(10,500 bar)**	8 – 9
Tubing & Coned and Threaded Nipples rated to 152,000 psi **(10,500 bar)**	10 – 11

MAXIMATOR GmbH, Lange Straße 6, 99734 Nordhausen, Telefon +49 (0) 3631 9533 – 0, Telefax + 49 (0) 3631 9533 – 5010, www.maximator.de, info@maximator.de

All technical and dimensional information subject to change. All general Terms and Conditions of sale, including limitations of our liability, apply to all products and services sold.

Ultra High Pressure Valves

» Pressures to 101,000 psi (7,000 bar)

Ordering Information
Typical catalog number: 101V5U071

101 V Valve Series	5U O.D. Tube Size	07 Stem Type	1 Body Pattern
101 V	**4U** – 1/4”	**07** – VEE stem	**1** – two-way straight
	5U – 5/16”		**2** – two-way angle
	6U – 3/8”		**3** – three-way, two
	9U – 9/16”		on pressure

Temperature Ranges

Standard valves are supplied with Teflon/Carbon packing and may be operated to 450°F (230°C). Consult Maximator for higher temperature packing ratings.

O.D. Size in. (mm)	Connec-tion Type	Orifice Size in. (mm)	Rated Cv*	Pressure Rating @ R.T. psi (bar)**
1/4 **(6.35)**	4UF	0.062 **(1.6)**	0.09	101,000 **(7,000)**
5/16 **(7.94)**	5UF	0.062 **(1.6)**	0.09	101,000 **(7,000)**
3/8 **(9.53)**	6UF	0.062 **(1.6)**	0.09	101,000 **(7,000)**
9/16 **(14.29)**	9UF	0.062 **(1.6)**	0.09	101,000 **(7,000)**

* Cv values shown are for 2-way straight pattern vee stem valves. For 2-way angle patterns, increase the Cv value by 50%.

** See page 2 in the Technical Section for Pressure/Temperature Rating Chart.

Valve Pattern	Catalog Number	Stem Type	O.D. Tube in.	Orifice in. (mm)	A	B	C	D	E	F	H	I	J	K	Valve Panel Hole	Block Thick-ness
					Dimensions in. (mm)											
2-Way Straight																
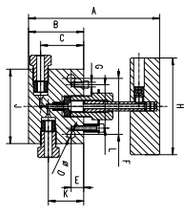	101V4U071	Vee	1/4	0.062 **(1,6)**	5.34 **(135.5)**	2.24 **(57)**	1.75 **(44.5)**	0.34 **(8.5)**	0.51 **(13)**	2.28 **(58)**	3.94 **(100)**		3.03 **(77)**	1.44 **(36.5)**	1.00 **(25.4)**	1.26 **(32)**
	101V5U071	Vee	5/16	0.062 **(1,6)**	5.34 **(135.5)**	2.24 **(57)**	1.75 **(44.5)**	0.34 **(8.5)**	0.51 **(13)**	2.28 **(58)**	3.94 **(100)**		3.03 **(77)**	1.44 **(36.5)**	1.00 **(25.4)**	1.26 **(32)**
	101V6U071	Vee	3/8	0.062 **(1,6)**	5.34 **(135.5)**	2.24 **(57)**	1.75 **(44.5)**	0.34 **(8.5)**	0.51 **(13)**	2.28 **(58)**	3.94 **(100)**		3.03 **(77)**	1.44 **(36.5)**	1.00 **(25.4)**	1.26 **(32)**
	101V9U071	Vee	9/16	0.062 **(1.6)**	5.72 **(145.3)**	2.64 **(67)**	1.79 **(45.5)**	0.34 **(8.5)**	0.51 **(13)**	1.77 **(45)**	3.94 **(100)**		2.64 **(67)**	1.40 **(35.5)**	1.00 **(25.4)**	1.54 **(39)**

G - Panel mounting screw thread size 10-24 UNC (screw included). All dimensions are for reference only and are subject to change.

All technical and dimensional information subject to change. All general Terms and Conditions of sale, including limitations of our liability, apply to all products and services sold.

Valve Pattern	Catalog Number	Stem Type	O.D. Tube in.	Orifice in. (mm)	Dimensions in. (mm) A	B	C	D	E	F	H	I	J	K	L	Valve Panel Hole	Block Thick-ness
2-Way Angle																	
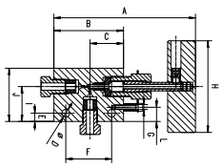	101V4U072	Vee	1/4	0.062 **(1.6)**	6.12 **(155.5)**	3.03 **(77)**	1.44 **(36.5)**	0.34 **(8.5)**	0.35 **(9)**	1.97 **(50)**	3.94 **(100)**	1.50 **(38)**	2.28 **(58)**		0.61 **(15.5)**	1.00 **(25.4)**	1.26 **(32)**
	101V5U072	Vee	5/16	0.062 **(1.6)**	6.12 **(155.5)**	3.03 **(77)**	1.44 **(36.5)**	0.34 **(8.5)**	0.35 **(9)**	1.97 **(50)**	3.94 **(100)**	1.50 **(38)**	2.28 **(58)**		0.61 **(15.5)**	1.00 **(25.4)**	1.26 **(32)**
	101V6U072	Vee	3/8	0.062 **(1.6)**	6.12 **(155.5)**	3.03 **(77)**	1.44 **(36.5)**	0.34 **(8.5)**	0.35 **(9)**	1.97 **(50)**	3.94 **(100)**	1.50 **(38)**	2.28 **(58)**		0.61 **(15.5)**	1.00 **(25.4)**	1.26 **(32)**
	101V9U072	Vee	9/16	0.062 **(1.6)**	6.05 **(153.5)**	2.95 **(75)**	1.40 **(35.5)**	0.34 **(8.5)**	0.51 **(13)**	1.77 **(45)**	3.94 **(100)**	1.32 **(33.5)**	2.64 **(67)**			1.00 **(25.4)**	1.54 **(39)**
3-Way / 2 on Pressure																	
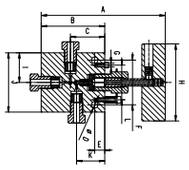	101V4U073	Vee	1/4	0.062 **(1,6)**	6.34 **(161)**	3.25 **(82.5)**	1.75 **(44.5)**	0.34 **(8.5)**	0.51 **(13)**	2.28 **(58)**	3.94 **(100)**	1.52 **(38.5)**	3.03 **(77)**	1.44 **(36.5)**	1.77 **(45)**	1.00 **(25.4)**	1.26 **(32)**
	101V5U073	Vee	5/16	0.062 **(1,6)**	6.34 **(161)**	3.25 **(82.5)**	1.75 **(44.5)**	0.34 **(8.5)**	0.51 **(13)**	2.28 **(58)**	3.94 **(100)**	1.52 **(38.5)**	3.03 **(77)**	1.44 **(36.5)**	1.77 **(45)**	1.00 **(25.4)**	1.26 **(32)**
	101V6U073	Vee	3/8	0.062 **(1,6)**	6.34 **(161)**	3.25 **(82.5)**	1.75 **(44.5)**	0.34 **(8.5)**	0.51 **(13)**	2.28 **(58)**	3.94 **(100)**	1.52 **(38.5)**	3.03 **(77)**	1.44 **(36.5)**	1.77 **(45)**	1.00 **(25.4)**	1.26 **(32)**
	101V9U073	Vee	9/16	0.062 **(1,6)**	6.36 **(161.5)**	3.25 **(82.5)**	1.81 **(46)**	0.34 **(8.5)**	0.51 **(13)**	1.77 **(45)**	3.94 **(100)**	1.32 **(33.5)**	2.64 **(67)**	1.40 **(35.5)**		1.00 **(25.4)**	1.54 **(39)**

G - Panel mounting screw thread size 10-24 UNC (screw included). All dimensions are for reference only and are subject to change.

All technical and dimensional information subject to change. All general Terms and Conditions of sale, including limitations of our liability, apply to all products and services sold.

Ultra High Pressure Fittings

» Pressures to 101,000 psi (7,000 bar)

High pressure fittings

Maximator high pressure fittings are designed to be used with the 101V series high pressure valves and high pressure tubing. All high pressure fittings have coned and threaded type connections. Mounting holes are standard on all elbows, tees and crosses.

Tubing Size	Gland	Collar	Plug	Tubing Cap
			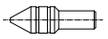	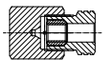
1/4	101G4U	101C4U	101P4U	101TC4U
3/8	101G6U	101C6U	101P6U	101TC6U
9/16	101G9U	101C9U	101P9U	101TC9U

Connection Components

All high pressure fittings are supplied with glands and collars. Refer to the adjacent chart for ordering any of the connection components individually. When using the plug, the collar is not needed.

Fitting Pattern	Catalog Number	Connection Type	O.D. Tube Size in.	Orifice in. (mm)	Dimensions in. (mm) A	B	C	D	E	F	G	Block Thick-ness
Elbow												
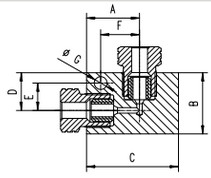	101L4U	4UF	1/4	0.094 **(2.3)**	0.89 **(22.6)**	1.02 **(25.9)**	1.54 **(39.1)**	0.63 **(16)**	0.46 **(11.7)**	0.65 **(16.5)**	0.22 **(5.6)**	1.02 **(25.9)**
	101L6U	6UF	3/8	0.125 **(3.2)**	1.26 **(32)**	1.50 **(38.1)**	2.01 **(51)**	0.98 **(24.9)**	0.72 **(18.3)**	0.69 **(17.5)**	0.26 **(6.6)**	1.02 **(25.9)**
	101L9U	9UF	9/16	0.188 **(4.8)**	1.89 **(48)**	1.89 **(48)**	2.64 **(67)**	1.10 **(28)**	0.83 **(21.1)**	0.94 **(23.9)**	0.33 **(8.4)**	1.54 **(39.1)**
Tee												
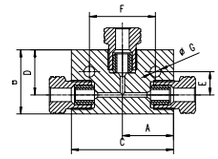	101T4U	4UF	1/4	0.094 **(2.3)**	1.00 **(25.4)**	1.26 **(32)**	2.01 **(51)**	0.89 **(22.6)**	0.46 **(11.7)**	1.30 **(33)**	0.22 **(5.6)**	1.02 **(25.9)**
	101T6U	6UF	3/8	0.125 **(3.2)**	1.00 **(25.4)**	1.57 **(39.9)**	2.01 **(51)**	1.06 **(26.9)**	0.72 **(18.3)**	1.38 **(35)**	0.26 **(6.6)**	1.02 **(25.9)**
	101T9U	9UF	9/16	0.188 **(4.8)**	1.32 **(33.5)**	2.13 **(54.1)**	2.64 **(67)**	1.38 **(35)**	0.83 **(21.1)**	1.89 **(48)**	0.33 **(8.4)**	1.54 **(39.1)**
Cross												
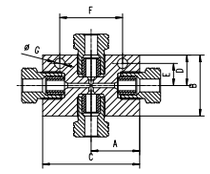	101X4U	4UF	1/4	0.094 **(2.3)**	1.00 **(25.4)**	1.26 **(32)**	2.01 **(51.1)**	0.63 **(16)**	0.46 **(11.7)**	1.30 **(33)**	0.22 **(5.6)**	1.02 **(25.9)**
	101X6U	6UF	3/8	0.125 **(3.2)**	1.00 **(25.4)**	2.13 **(54.1)**	2.01 **(51.1)**	1.06 **(27)**	0.72 **(18.3)**	1.38 **(35)**	0.26 **(6.6)**	1.02 **(25.9)**
	101X9U	9UF	9/16	0.188 **(4.8)**	1.32 **(33.5)**	2.76 **(70.1)**	2.64 **(67)**	1.38 **(35)**	0.83 **(21.1)**	1.89 **(48)**	0.33 **(8.4)**	1.54 **(39.1)**

See page 2 in the Technical Section for pressure/temperature rating chart.
All dimensions are for reference only and are subject to change.

All technical and dimensional information subject to change. All general Terms and Conditions of sale, including limitations of our liability, apply to all products and services sold.

Fitting Pattern	Catalog Number	Connection Type	O.D. Tube Size in.	Orifice in. (mm)	Dimensions in. (mm) A	B	C	D	E	F	G	Block Thick-ness
Straight Coupling / Union Coupling												
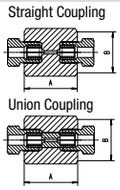	101F4U	4UF	1/4	0.094 **(2.3)**	1.38 **(35)**	1.06 **(27)**	Straight Coupling					
	101UF4U						Union Coupling					
	101F6U	6UF	3/8	0.125 **(3.2)**	1.77 **(45)**	1.06 **(27)**	Straight Coupling					
	101UF6U						Union Coupling					
	101F9U	9UF	9/16	0.188 **(4.8)**	2.19 **(55.6)**	1.44 **(36.6)**	Straight Coupling					
	101UF9U						Union Coupling					
Bulkhead Coupling												
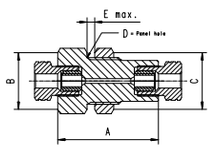	101BF4U	4UF	1/4	0.094 **(2.3)**	1.89 **(48)**	1.06 **(27)**	1.06 **(27)**	0.94 **(23.9)**	0.16 **(4)**			
	101BF6U	6UF	3/8	0.125 **(3.2)**	2.38 **(60.5)**	1.44 **(36.5)**	1.44 **(36.5)**	1.12 **(28.5)**	0.35 **(8.9)**			
	101BF9U	9UF	9/16	0.188 **(4.8)**	2.76 **(70.1)**	1.63 **(41.3)**	1.63 **(41.3)**	1.43 **(36.3)**	0.67 **(17)**			

See page 2 in the Technical Section for pressure/temperature rating chart.
All dimensions are for reference only and are subject to change.

Ball Check Valves

Maximator Ball Check Valves prevent reverse flow where bubble tight shut-off is not mandatory. These Check Valves are designed with a ball cradled floating poppet to assure positive inline seating.

This poppet design allows full flow around the ball to minimize pressure drop. Check Valves are rated to 660°F. **(350°C)**. All Check Valves are supplied with glands and collars.

These Check Valves are not to be used as a relief device. The opening pressure of the Ball Check Valves is approx. 20 psi (1.5 bar).

» Materials:
Body, cover, cover gland: High streght series stainless steel
Poppet, Ball and Spring: 300 and 400 series stainless steel

Valve Pattern	Catalog Number	Connection Type	Pressure Rating psi (bar)	Orifice in. (mm)	Rated (Cv)	Dimensions in. (mm) A (Hex.)	B
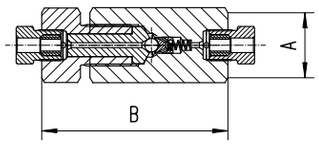	101BC4U	4UF	101,000 **(7,000)**	0.094 **(2.3)**	0.15	1.18 **(30)**	3.38 **(85.7)**
	101BC5U	5UF	101,000 **(7,000)**	0.062 **(1.6)**	0.11	1.63 **(41.3)**	5.42 **(137.6)**
	101BC6U	6UF	101,000 **(7,000)**	0.125 **(3.2)**	0.28	1.18 **(30)**	3.81 **(96.8)**
	101BC9U	9UF	101,000 **(7,000)**	0.188 **(4.8)**	0.63	1.61 **(41)**	4.62 **(117.4)**

All technical and dimensional information subject to change. All general Terms and Conditions of sale, including limitations of our liability, apply to all products and services sold.

Ultra High Pressure Tubing

» Pressures to 101,000 psi (7,000 bar)

High Pressure Tubing

Maximator offers a line of cold drawn thick wall tubing, with flow areas to compliment the high pressure valves and fittings. This tubing is made under strict manufacturing and quality control standards and inspections, with dimensional tolerances to match the requirements of the high pressure coned and threaded connections.

The standard material is HP 160 stainless steels. Other materials may be provided on special request, depending on the specific material, diameters and lengths.

Tubing Tolerances

Normal Tubing Size in. (mm)	Tolerance O.D in. (mm)
1/4 **(6.35)**	0.248 / 0.243 **(6.299 / 6.172)**
3/8 **(9.53)**	0.370 / 0.365 **(9.398 / 9.271)**
9/16 **(14.29)**	0.557 / 0.552 **(14.147 / 14.021)**

Catalog Number	Tube Material	Fits Connection Type	Tube Size in. (mm)		Working Pressure psi (bar)				
			O.D.	I.D.	-325°F to 100°F (-198°C to 37°C)	200°F (93°C)	400°F (204°C)	600°F (315°C)	800°F (426°C)
101TU4U-HP160	HP160	4UF	1/4 **(6.35)**	0.06 **(1.59)**	101,000 **(7,000)**	82,600 **(5,740)**	72,600 **(5,040)**	66,500 **(4,620)**	61,500 **(4,270)**
101TU6U-HP160	HP160	6UF	3/8 **(9.53)**	0.125 **(3.20)**	101,000 **(7,000)**	82,600 **(5,740)**	72,600 **(5,040)**	66,500 **(4,620)**	61,500 **(4,270)**
101TU9U-HP160	HP160	9UF	9/16 **(14.29)**	0.188 **(4.77)**	101,000 **(7,000)**	82,600 **(5,740)**	72,600 **(5,040)**	66,500 **(4,620)**	61,500 **(4,270)**

All dimensions for reference only and are subject of change.

All technical and dimensional information subject to change. All general Terms and Conditions of sale, including limitations of our liability, apply to all products and services sold.

Coned and threaded nipples

Maximator offers a line of coned and threaded ultra high pressure tube nipples in a variety of lengths for all standard tube sizes.

The coned and threaded ultra high pressure tube nipples are available in HP 160. See chart below for ordering information.

Special length coned and threaded nipples are available upon request. Consult Maximator for availability and price.

Catalog Numbers are HP160 material Length in. (mm)							Fits Con-nection Type	Tube Size in. (mm)		Working Pressure at 100°F psi (bar)
2.75" (69.85)	3" (76.2)	4" (101.6)	6" (152.4)	8" (203.2)	10" (254)	12" (304.8)		O.D.	I.D.	
101N4U-2.75-HP160	101N4U-3-HP160	101N4U-4-HP160	101N4U-6-HP160	101N4U-8-HP160	101N4U-10-HP160	101N4U-12-HP160	4UF	1/4	0.06 (**1.59**)	101,000 **(7,000)**
	101N6U-3-HP160	101N6U-4-HP160	101N6U-6-HP160	101N6U-8-HP160	101N6U-10-HP160	101N6U-12-HP160	6UF	3/8	0.125 **(3.17)**	101,000 **(7,000)**
		101N9U-4-HP160	101N9U-6-HP160	101N9U-8-HP160	101N9U-10-HP160	101N9U-12-HP160	9UF	9/16	0.188 **(4.77)**	101,000 **(7,000)**

Standard nipples are not supplied with glands and collars, see Fittings on page 2 for these components.
See adjacent Tubing page 4, for pressure/temperature rating chart.

All dimensions are for reference only and subject to change.

All technical and dimensional information subject to change. All general Terms and Conditions of sale, including limitations of our liability, apply to all products and services sold.

Ultra High Pressure Fittings

» Pressures to 152,000 psi (10,500 bar)

Ultra high pressure fittings

Maximator ultra high pressure fittings are designed to be used with the 101V series ultra high pressure valves and ultra high pressure tubing. All ultra high pressure fittings have coned and threaded type connections and are supplied with glands and collars. Mounting holes are standard on all elbows, tees, and crosses.

Tubing Size	Gland	Collar	Plug	Tubing Cap
			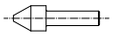	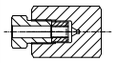
5/16	152G5U	152C5U	152P5U	152TC5U

Connection Components

All ultra high pressure fittings are supplied with glands and collars. Refer to the adjacent chart for ordering any of the connection components individually. When using the plug, the collar is not needed.

Fitting Pattern	Catalog Number	Connection Type	O.D. Tube Size in.	Orifice in. (mm)	Dimensions in. (mm) A	B	C	D	E	F	G	Block Thickness
Elbow												
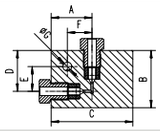	152L5U	5UF	5/16	0.094 **(2.3)**	1.52 **(38.6)**	2.13 **(54.1)**	3.03 **(77)**	1.52 **(38.6)**	0.92 **(23.4)**	0.92 **(23.4)**	0.33 **(8.4)**	1.26 **(32)**
Tee												
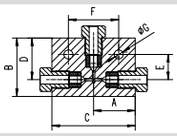	152T5U	5UF	5/16	0.094 **(2.3)**	1.52 **(38.6)**	2.13 **(54.1)**	3.03 **(77)**	1.52 **(38.6)**	0.92 **(23.4)**	1.83 **(46.5)**	0.33 **(8.4)**	1.26 **(32)**
Cross												
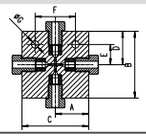	152X5U	5UF	5/16	0.094 **(2.3)**	1.52 **(38.6)**	3.03 **(77)**	3.03 **(77)**	1.52 **(38.6)**	0.92 **(23.4)**	1.83 **(46.5)**	0.33 **(8.4)**	1.26 **(32)**

See page 2 in the Technical Section for pressure/temperature rating chart. All dimensions are for reference only and are subject to change.

All technical and dimensional information subject to change. All general Terms and Conditions of sale, including limitations of our liability, apply to all products and services sold.

Fitting Pattern	Catalog Number	Connection Type	O.D. Tube Size in.	Orifice in. (mm)	Dimensions in. (mm) A	B	C	D	E	F	G	Block Thick-ness
Straight Coupling / Union Coupling												
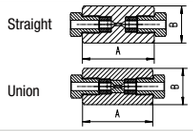	152F5U	5UF	5/16	0.094 **(2.3)**	2.64 **(67.1)**	1.19 **(30.2)**	Straight Coupling					
	152UF5U						Union Coupling					
Bulkhead Coupling												
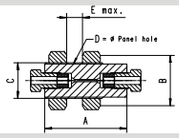	152BF5U	5UF	5/16	0.094 **(2.3)**	3.27 **(83)**	2.00 **(50.8)**	1.42 **(36.1)**	1.46 **(36)**	0.87 **(22.1)**			
Manifold Block												
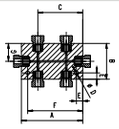	152MB65U	5UF	5/16	0.094 **(2.3)**	4.72 **(120)**	3.03 **(77)**	3.21 **(81.5)**	0.33 **(8.5)**	0.59 **(15)**	4.13 **(105)**	1.52 **(38.5)**	1.26 **(32)**

See page 2 in the Technical Section for pressure/temperature rating chart. All dimensions are for reference only and are subject to change.

All technical and dimensional information subject to change. All general Terms and Conditions of sale, including limitations of our liability, apply to all products and services sold.

Ultra High Pressure Tubing

» Pressures to 152,000 psi (10,500 bar)

High Pressure Tubing

Maximator offers a line of cold drawn thick wall tubing, with flow areas to compliment the high pressure valves and fittings. This tubing is made under strict manufacturing and quality control standards and inspections, with dimensional tolerances to match the requirements of the high pressure coned and threaded connections.

The standard material is 316 stainless steel.

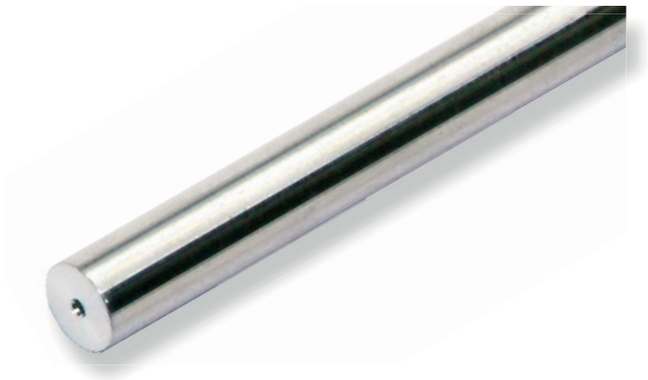

Tubing Tolerances

Normal Tubing Size in. (mm)	Tolerance O.D in. (mm)
5/16 **(7.94)**	0.310 / 0.306 **(7.874 / 7.72)**

Catalog Number	Tube Material	Fits Connection Type	Tube Size in. (mm)		Working Pressure psi (bar)				
			O.D.	I.D.	-325°F to 100°F (-198°C to 37°C)	200°F (93°C)	400°F (204°C)	600°F (315°C)	800°F (426°C)
152TU5U-316	316SS	5UF	5/16 **(7.94)**	0.062 **(1.58)**	152,000 **(10,500)**	136,800 **(9,500)**	126,160 **(8,700)**	115,520 **(8,000)**	109,44 **(7,600)**
152TU5U-HP160	HP160	5UF	5/16 **(7.94)**	0.062 **(1.58)**	152,000 **(10,500)**	124,000 **(8,600)**	108,800 **(7,560)**	99,800 **(6,930)**	92,200 **(6,400)**

All dimensions for reference only and are subject of change.

All technical and dimensional information subject to change. All general Terms and Conditions of sale, including limitations of our liability, apply to all products and services sold.

Coned and threaded nipples

Maximator offers a line of coned and threaded ultra high pressure tube nipples in a variety of lengths.

The coned and threaded ultra high pressure tube nipples are available in 316 stainless steel. See chart below for ordering information.

Special length coned and threaded nipples are available upon request. Consult Maximator for availability and price.

Catalog Numbers are 316 Stainless Steel material Lenght in. (mm)					Fits Connection Type	Tube Size in. (mm)		Working Pressure at 100°F psi (bar)
4" (101.6)	6" (152.4)	8" (203.2)	10" (254)	12" (304.8)		O.D.	I.D.	
152N5U-4-316	152N5U-6-316	152N5U-8-316	152N5U-10-316	152N5U-12-316	5UF	5/16 **(7.94)**	0.062 **(1.58)**	152,000 **(10,500)**

Standard nipples are not supplied with glands and collars, see Fittings on page 3 for these components.
See the above chart for Pressure/Temperature Rating.

All dimensions are for reference only and subject to change.

All technical and dimensional information subject to change. All general Terms and Conditions of sale, including limitations of our liability, apply to all products and services sold.

Valve Actuators

MAXIMATOR air operated valve actuators are piston type design, and are mounted on a manual valve to provide remote control capability. There are two air to open actuators and two air to close actuators available, and selection is based on the valve size, system pressure, and air pressure available.

Valves Actuator features:

- All valve actuators are ATEX (CE Ex II 2D/2G IIC c TX) approved
- Piston style valve actuator design offers dependable operation and longer actuator cycle life.
- Two different size actuators are available to cover varying plant air supplies.
- Actuators are made of anodized aluminum, which provides good corrosion resistance.
- Actuators are available in normally open or normally closed configuration.
- Actuators are available in double acting configuration.

MAXIMATOR offers a complete line of high pressure valves, fittings and tubing to compliment the valve actuator line.

Note: When selecting multiple items, the pressure rating would be that of the lowest rated component.

Valve Actuators Index	Page:
Valve Actuators Air to Close, Normally Open	2 – 3
Valve Actuators Air to Open, Normally Closed	4 – 7

MAXIMATOR GmbH, Lange Straße 6, 99734 Nordhausen, Telefon +49 (0) 3631 9533 – 0, Telefax + 49 (0) 3631 9533 – 5010, www.maximator.de, info@maximator.de

All technical and dimensional information subject to change. All general Terms and Conditions of sale, including limitations of our liability, apply to all products and services sold.

Valve Actuators

» Air to Close, Normally Open

Order Information

Select the basic manual valve from the appropriate pressure section, then add the actuator suffix number to the end of the manual Valve catalog number.

Example: 21V4M071-**YMNO**, medium duty actuator, normally open. This valve can be operated at 22,500 psi with an air supply of 100 psi to the valve actuator.

Technical Information

- **Maximum allowable working pressure for actuator:** See table below for specific valve type
- **Maximum operation temperature range for actuator:** -20°F to +200°F (-30°C to + 95°C)
- **Actuator material:** Anodized Aluminum
- **Air connection size:** 1/8NPT

Medium Duty Valve Actuator

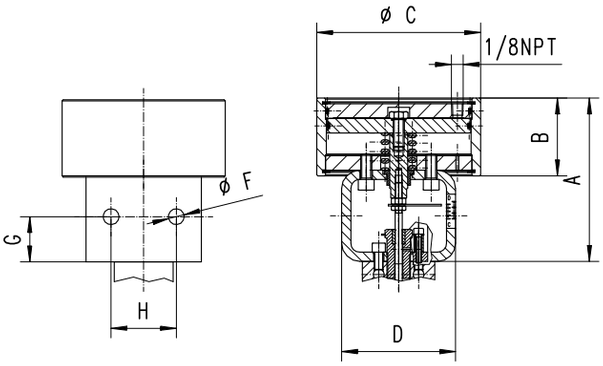

Heavy Duty Valve Actuator

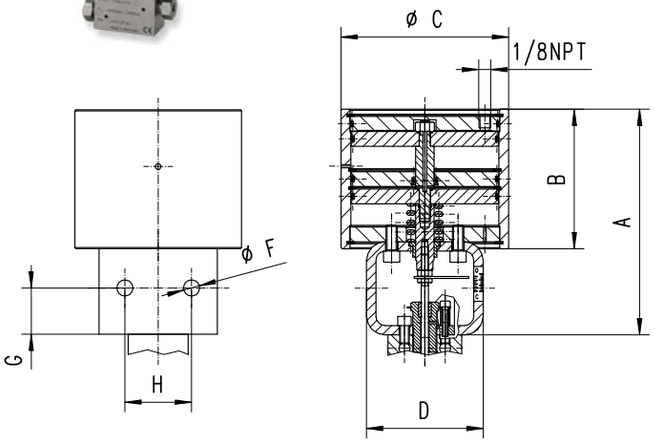

Actuator type	Ordering Suffix	Piston area in.² (mm²)	A in. (mm)	B in. (mm)	C in. (mm)	D in. (mm)	F in. (mm)	G in. (mm)	H in. (mm)
Medium duty	4;6;9-YMNO	19.6 **(12.645)**	5.79 **(147.3)**	2.69 **(68.3)**	5.67 **(144)**	4.09 **(104)**	0.28 **(7)**	1.65 **(42)**	1.13 **(28.8)**
Heavy duty	4;6;9-YHNO	39.2 **(25.290)**	7.78 **(197.8)**	4.72 **(119.9)**	5.67 **(144)**	4.09 **(104)**	0.28 **(7)**	1.65 **(42)**	1.13 **(28.8)**
Medium duty	5-YMNO	19.6 **(12.645)**	5.79 **(147.3)**	2.69 **(68.3)**	5.67 **(144)**	4.09 **(104)**	0.28 **(7)**	1.65 **(42)**	1.13 **(28.8)**
Heavy duty	5-YHNO	39.2 **(25.290)**	7.78 **(197.8)**	4.72 **(119.9)**	5.67 **(144)**	4.09 **(104)**	0.28 **(7)**	1.65 **(42)**	1.13 **(28.8)**
Medium duty	12-YMNO	19.6 **(12.645)**	6.58 **(167.3)**	2.69 **(68.3)**	5.67 **(144)**	4.09 **(104)**	0.28 **(7)**	2.55 **(64.7)**	1.13 **(28.8)**
Heavy duty	12;16-YHNO	39.2 **(25.290)**	8.58 **(217.9)**	4.72 **(119.9)**	5.67 **(144)**	4.09 **(104)**	0.28 **(7)**	2.55 **(64.7)**	1.13 **(28.8)**

All technical and dimensional information subject to change. All general Terms and Conditions of sale, including limitations of our liability, apply to all products and services sold.

Valve Series	Air Actuator Type	Ordering Suffix	Air pressure required to close Valve at: System Pressure ksi (bar)											Max. Pressure psi (bar)	Stem Travel in. (mm)	Flow Value Cv*
			1-3 (68-200)	4 (275)	6 (400)	8 (550)	10 (700)	12 (830)	14 (970)	16 (1,100)	18 (1,250)	20 (1,400)	21 (1,500)			
21V4	Medium Duty	-YMNO	40 (2.8)	40 (2.8)	40 (2.8)	40 (2.8)	50 (3.5)	60 (4.2)	70 (4.9)	80 (5.6)	85 (5.9)	95 (6.6)	100 (6.9)	21,000 (1,500)	0.25 (6.4)	0.31
	Heavy Duty	-YHNO	20 (1.4)	20 (1.4)	20 (1.4)	20 (1.4)	25 (1.7)	30 (2.1)	35 (2.4)	40 (2.8)	45 (3.1)	50 (3.5)	55 (3.8)			
21V6	Medium Duty	-YMNO	45 (3.1)	45 (3.1)	45 (3.1)	45 (3.1)	55 (3.8)	65 (4.5)	75 (5.2)	85 (5.9)	95 (6.6)	100 (6.9)		20,000 (1,400)	0.25 (6.4)	0.75
	Heavy Duty	-YHNO	25 (1.7)	25 (1.7)	25 (1.7)	25 (1.7)	30 (2.1)	35 (2.4)	40 (2.8)	45 (3.1)	50 (3.5)	55 (3.8)	60 (4.2)	21,000 (1,500)		
21V9	Medium Duty	-YMNO	60 (4.2)	60 (4.2)	65 (4.5)	80 (5.6)	100 (6.9)							10,700 (700)	0.38 (9.7)	1.30
	Heavy Duty	-YHNO	30 (2.1)	30 (2.1)	30 (2.1)	40 (2.8)	50 (3.5)	55 (3.8)	60 (4.2)	70 (4.9)	80 (5.6)	85 (5.9)	90 (6.2)	21,000 (1,500)		
21V12	Medium Duty	-YMNO	80 (5,6)	80 (5.6)	100 (6.9)									6,100 (400)	0.44 (11.2)	2.50
	Heavy Duty	-YHNO	40 (2.8)	40 (2.8)	50 (3.5)	60 (4.2)	75 (5.2)	90 (6.2)	100 (6.9)					13,600 (970)		
21V16	Heavy Duty	-YHNO	50 (3.5)	50 (3.5)	70 (4.9)	100 (6.9)								8,800 (550)	0.56 (14.2)	3.40
			1-12 (68-830)	14 (970)	16 (1,100)	18 (1,250)	20 (1,400)	22 (1,500)	24 (1,650)	26 (1,800)	28 (1,900)	30 (2,000)	36 (2,500)			
36V4	Medium Duty	-YMNO	25 (1.7)	25 (1.7)	30 (2.1)	35 (2.4)	35 (2.4)	40 (2.8)	45 (3.1)	50 (3.5)	50 (3.5)	55 (3.8)	65 (4.5)	36,000 (2,500)	0.19 (4.8)	0.12
	Heavy Duty	-YHNO	15 (1)	15 (1)	15 (1)	20 (1.4)	20 (1.4)	20 (1.4)	25 (1.7)	25 (1.7)	25 (1.7)	30 (2.1)	35 (2.4)			
36V6 & 36V9	Medium Duty	-YMNO	30 (2.1)	35 (2.4)	40 (2.8)	45 (3.1)	50 (3.5)	55 (3.8)	60 (4.2)	65 (4.9)	70 (4.9)	72 (5)	85 (5.9)	36,000 (2,500)	0.19 (4.8)	0.23
	Heavy Duty	-YHNO	15 (1)	20 (1.4)	20 (1.4)	25 (1.7)	25 (1.7)	30 (2.1)	30 (2.1)	35 (2.4)	35 (2.4)	40 (2.8)	50 (3.5)			0.33
			1-15 (68-1,050)	20 (1,400)	25 (1,800)	30 (2,000)	35 (2,400)	40 (2,800)	45 (3,100)	50 (3,500)	55 (3,800)	60 (4,100)	65 (4,500)			
65V4 & 65V6	Medium Duty	-YMNO	30 (2.1)	30 (2.1)	30 (2.1)	35 (2.4)	45 (3.1)	50 (3.5)	55 (3.8)	60 (4.2)	70 (4.9)	75 (5.2)	80 (5.6)	65,000 (4,500)	0.25 (6.4)	0.08
	Heavy Duty	-YHNO	15 (1)	15 (1)	15 (1)	20 (1.4)	25 (1.7)	25 (1.7)	30 (2.1)	30 (2.1)	35 (2.4)	40 (2.8)	45 (3.1)			0.09
65V9	Medium Duty	-YMNO	35 (2.4)	35 (2.4)	40 (2.8)	50 (3.5)	55 (3.8)	65 (4.5)	70 (5.2)	75 (5.2)	85 (5.9)	90 (6.2)	95 (6.6)	65,000 (4,500)	0.25 (6.4)	0.14
	Heavy Duty	-YHNO	20 (1.4)	20 (1.4)	20 (1.4)	25 (1.7)	30 (2.1)	35 (2.4)	35 (2.8)	40 (2.8)	45 (3.1)	45 (3.1)	50 (3.5)			
			1-10 (68-680)	20 (1,400)	30 (2,000)	40 (2,800)	50 (3,500)	60 (4,100)	70 (4,800)	80 (5,500)	90 (6,200)	101 (7,000)				
101V4 101V5	Medium Duty	-YMNO	50 (3.5)	50 (3.5)	50 (3.5)	50 (3.5)	55 (3.8)	65 (4.5)	75 (5.2)	85 (5.9)	95 (6.6)	100 (6.9)		101,000 (7,000)	0.12 (3)	0,09
101V6 101V9	Heavy Duty	-YHNO	30 (2.1)	30 (2.1)	30 (2.1)	30 (2.1)	30 (2.1)	35 (2.4)	40 (2.8)	40 (2.8)	45 (3.1)	50 (3.5)				

* Cv values are for straight pattern valves, increase this value by 50% for angle pattern valves.

All technical and dimensional information subject to change. All general Terms and Conditions of sale, including limitations of our liability, apply to all products and services sold.

Valve Actuators

» Air to Open, Normally Closed

Order Information

Select the basic manual valve from the appropriate pressure section, then add the actuator suffix number to the end of the manual Valve catalog number.

Example: 21V4M071-**YMNC**, medium duty actuator, normally closed. This valve can be operated at 22,500 psi with an air supply of 100 psi to the valve actuator.

Technical Information

- **Maximum allowable working pressure for actuator:** See table below for specific valve type
- **Maximum operation temperature range for actuator:** -20°F to +200°F (-30°C to + 95°C)
- **Actuator material:** Anodized Aluminum
- **Air connection size:** 1/8NPT

Medium Duty Valve Actuator

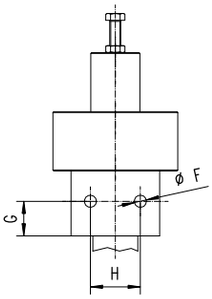

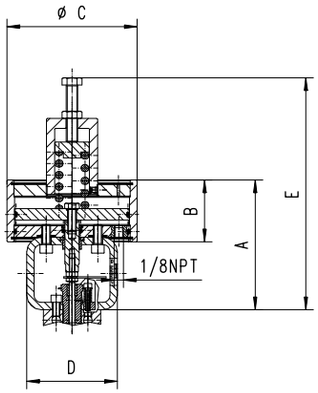

Heavy Duty Valve Actuator

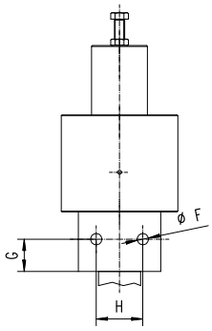

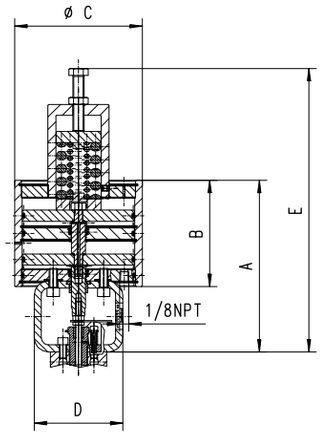

Actuator type	Ordering Suffix	Piston area in.² (mm²)	A in. (mm)	B in. (mm)	C in. (mm)	D in. (mm)	E* in. (mm)	F in. (mm)	G in. (mm)	H in. (mm)
Medium duty	4;6;9-YMNC	19.6 **(12.645)**	5.79 **(147.3)**	2.69 **(68.3)**	5.67 **(144)**	4.09 **(104)**	10.09 **(256.3)**	0.28 **(7)**	1.65 **(42)**	1.13 **(28.8)**
Heavy duty	4;6;9-YHNC	39.2 **(25.290)**	7.78 **(197.8)**	4.72 **(119.9)**	5.67 **(144)**	4.09 **(104)**	12.59 **(320)**	0.28 **(7)**	1.65 **(42)**	1.13 **(28.8)**
Medium duty	5-YMNC	19.6 **(12.645)**	5.79 **(147.3)**	2.69 **(68.3)**	5.67 **(144)**	4.09 **(104)**	10.09 **(256.3)**	0.28 **(7)**	1.65 **(42)**	1.13 **(28.8)**
Heavy duty	5-YHNC	39.2 **(25.290)**	7.78 **(197.8)**	4.72 **(119.9)**	5.67 **(144)**	4.09 **(104)**	12.59 **(320)**	0.28 **(7)**	1.65 **(42)**	1.13 **(28.8)**
Heavy duty	12;16-YHNC	39.2 **(25.290)**	8.58 **(217.9)**	4.72 **(119.9)**	5.67 **(144)**	4.09 **(104)**	13.27 **(337.8)**	0.28 **(7)**	2.55 **(64.7)**	1.13 **(28.8)**

*E dimension is an approximation only.

All technical and dimensional information subject to change. All general Terms and Conditions of sale, including limitations of our liability, apply to all products and services sold.

Valve Series	Air Actuator Type	Ordering Suffix	Data	6 (400)	8 (550)	10 (700)	12 (830)	14 (970)	16 (1,100)	18 (1,250)	20 (1,400)	21 (1,500)	Max. Pressure psi (bar)	Flow Value Cv*
				Air pressure required to open Valve at: System Pressure ksi (bar)										
21V4	Medium Duty	-YMNC	Air Pressure psi **(bar)**	65 **(4.5)**	65 **(4.5)**	75 **(5.2)**	85 **(5.9)**	95 **(6.6)**	95 **(6.6)**	95 **(6.6)**	95 **(6.6)**	100 **(6.9)**	21,000 **(1,500)**	0.31 - 0.22
			Spring Pre-compression in. **(mm)**	0.19 **(4.8)**	0.19 **(4.8)**	0.25 **(6.4)**	0.31 **(7.9)**	0.38 **(9.7)**	0.44 **(11.2)**	0.5 **(12.7)**	0.56 **(14.2)**	0.59 **(15)**		
			Stem Travel in. **(mm)**	0.25 **(6.4)**	0.25 **(6.4)**	0.25 **(6.4)**	0.25 **(6.4)**	0.25 **(6.4)**	0.19 **(4.8)**	0.12 **(3)**	0.06 **(1.5)**	0.03 **(0.8)**		
	Heavy Duty	-YHNC	Air Pressure psi **(bar)**	35 **(2.4)**	35 **(2.4)**	40 **(2.8)**	45 **(3.1)**	50 **(3.5)**	50 **(3.5)**	50 **(3.5)**	50 **(3.5)**	55 **(3.8)**	21,000 **(1,500)**	
			Spring Pre-compression in. **(mm)**	0.19 **(4.8)**	0.19 **(4.8)**	0.25 **(6.4)**	0.31 **(7.9)**	0.38 **(9.7)**	0.44 **(11.2)**	0.5 **(12.7)**	0.56 **(14.2)**	0.59 **(15)**		
			Stem Travel in. **(mm)**	0.25 **(6.4)**	0.25 **(6.4)**	0.25 **(6.4)**	0.25 **(6.4)**	0.25 **(6.4)**	0.19 **(4.8)**	0.12 **(3)**	0.06 **(1.5)**	0.03 **(0.8)**		
21V6	Medium Duty	-YMNC	Air Pressure psi **(bar)**	65 **(4.5)**	75 **(5.2)**	85 **(5.9)**	95 **(6.6)**	95 **(6.6)**	95 **(6.6)**	95 **(6.6)**			18,250 **(1,250)**	0.75 - 0.57
			Spring Pre-compression in. **(mm)**	0.19 **(4.8)**	0.25 **(6.4)**	0.31 **(7.9)**	0.38 **(9.7)**	0.44 **(11.2)**	0.5 **(12.7)**	0.56 **(14.2)**				
			Stem Travel in. **(mm)**	0.25 **(6.4)**	0.25 **(6.4)**	0.25 **(6.4)**	0.25 **(6.4)**	0.19 **(4.8)**	0.12 **(3)**	0.06 **(1.5)**				
	Heavy Duty	-YHNC	Air Pressure psi **(bar)**	35 **(2.4)**	40 **(2.8)**	45 **(3.1)**	50 **(3.5)**	50 **(3.5)**	50 **(3.5)**	50 **(3.5)**			18,250 **(1,250)**	
			Spring Pre-compression in. **(mm)**	0.19 **(4.8)**	0.25 **(6.4)**	0.31 **(7.9)**	0.38 **(9.7)**	0.44 **(11.2)**	0.5 **(12.7)**	0.56 **(14.2)**				
			Stem Travel in. **(mm)**	0.25 **(6.4)**	0.25 **(6.4)**	0.25 **(6.4)**	0.25 **(6.4)**	0.19 **(4.8)**	0.12 **(3)**	0.06 **(1.5)**				
21V9	Medium Duty	-YMNC	Air Pressure psi **(bar)**	90 **(6.2)**	95 **(6.6)**	95 **(6.6)**							9,800 **(675)**	1.29 -0.53
			Spring Pre-compression in. **(mm)**	0.34 **(8.6)**	0.47 **(11.9)**	0.56 **(14.2)**								
			Stem Travel in. **(mm)**	0.25 **(6.4)**	0.15 **(3.8)**	0.06 **(1.5)**								
	Heavy Duty	-YHNC	Air Pressure psi **(bar)**	55 **(3.8)**	65 **(4.5)**	70 **(4.9)**	75 **(5.2)**	75 **(5.2)**	75 **(5.2)**				15,700 **(1,080)**	
			Spring Pre-compression in. **(mm)**	0.22 **(5.6)**	0.28 **(7.1)**	0.34 **(8.6)**	0.44 **(11.2)**	0.5 **(12.7)**	0.56 **(14.2)**					
			Stem Travel in. **(mm)**	0.25 **(6.4)**	0.25 **(6.4)**	0.25 **(6.4)**	0.19 **(4.8)**	0.12 **(3)**	0.06 **(1.5)**					
21V12	Heavy Duty	-YHNC	Air Pressure psi **(bar)**	75 **(5.2)**	75 **(5.2)**								9,200 **(630)**	0.80 - 0.78
			Spring Pre-compression in. **(mm)**	0.38 **(9.7)**	0.56 **(14.2)**									
			Stem Travel in. **(mm)**	0.25 **(6.4)**	0.06 **(1.5)**									
21V16	Heavy Duty	-YHNC	Air Pressure psi **(bar)**	75 **(5.2)**									6,100 **(420)**	2.73 - 0.15
			Spring Pre-compression in. **(mm)**	0.56 **(14.2)**										
			Stem Travel in. **(mm)**	0.06 **(1.5)**										

* Cv values are for straight pattern valves, increase this value by 50% for angle pattern valves.
Cv values vary due to compression of actuator spring, and are adjusted based on system pressure.
Values shown are for maximum to minimum stem travel position.

All technical and dimensional information subject to change. All general Terms and Conditions of sale, including limitations of our liability, apply to all products and services sold.

Valve Actuators

» Air to Open, Normally Closed

Valve Series	Air Actuator Type	Ordering Suffix	Data	Air pressure required to open Valve at: System Pressure ksi (bar) 1-12 (68-830)	14 (970)	16 (1,100)	18 (1,250)	20 (1,400)	22 (1,500)	24 (1,650)	26 (1,800)	28 (1,900)	30 (2,000)	36 (2,500)	Max. Pressure psi (bar)	Flow Value Cv*
36V4	Medium Duty	-YMNC	Air Pressure psi **(bar)**	45 **(3.1)**	55 **(3.8)**	55 **(3.8)**	55 **(3.8)**	55 **(3.8)**	65 **(4.5)**	65 **(4.5)**	65 **(4.5)**	65 **(4.5)**	75 **(5.2)**	85 **(5.9)**	36,000 **(2,500)**	0.12
			Spring Pre-compression in. **(mm)**	0.12 **(3)**	0.19 **(4.8)**	0.19 **(4.8)**	0.19 **(4.8)**	0.19 **(4.8)**	0.25 **(6.4)**	0.25 **(6.4)**	0.25 **(6.4)**	0.25 **(6.4)**	0.31 **(7.9)**	0.37 **(9.4)**		
			Stem Travel in. **(mm)**	0.19 **(4.8)**	0.19 **(4.8)**	0.19 **(4.8)**	0.19 **(4.8)**	0.19 **(4.8)**	0.19 **(4.8)**	0.19 **(4.8)**	0.19 **(4.8)**	0.19 **(4.8)**	0.19 **(4.8)**	0.19 **(4.8)**		
	Heavy Duty	-YHNC	Air Pressure psi **(bar)**	25 **(1.7)**	30 **(2.1)**	30 **(2.1)**	30 **(2.1)**	30 **(2.1)**	35 **(2.4)**	35 **(2.4)**	35 **(2.4)**	35 **(2.4)**	40 **(2.8)**	45 **(3.1)**	36,000 **(2,500)**	
			Spring Pre-compression in. **(mm)**	0.12 **(4.8)**	0.19 **(4.8)**	0.19 **(4.8)**	0.19 **(4.8)**	0.19 **(4.8)**	0.25 **(6.4)**	0.25 **(6.4)**	0.25 **(6.4)**	0.25 **(6.4)**	0.31 **(7.9)**	0.37 **(9.4)**		
			Stem Travel in. **(mm)**	0.19 **(4.8)**	0.19 **(4.8)**	0.19 **(4.8)**	0.19 **(4.8)**	0.19 **(4.8)**	0.19 **(4.8)**	0.19 **(4.8)**	0.19 **(4.8)**	0.19 **(4.8)**	0.19 **(4.8)**	0.19 **(4.8)**		
36V6 & 36V9	Medium Duty	-YMNC	Air Pressure psi **(bar)**	55 **(3.8)**	55 **(3.8)**	65 **(4.5)**	65 **(4.5)**	75 **(5.2)**	75 **(5.2)**	75 **(5.2)**	85 **(5.9)**	85 **(5.9)**	95 **(6.6)**	100 **(6.9)**	36,000 **(2,500)**	0,12
			Spring Pre-compression in. **(mm)**	0.19 **(4.8)**	0.19 **(4.8)**	0.25 **(6.4)**	0.25 **(6.4)**	0.31 **(7.9)**	0.31 **(7.9)**	0.31 **(7.9)**	0.38 **(9.7)**	0.38 **(9.7)**	0.44 **(11.2)**	0.5 **(12.7)**		
			Stem Travel in. **(mm)**	0.19 **(4.8)**	0.19 **(4.8)**	0.19 **(4.8)**	0.19 **(4.8)**	0.19 **(4.8)**	0.19 **(4.8)**	0.19 **(4.8)**	0.19 **(4.8)**	0.19 **(4.8)**	0.19 **(4.8)**	0.19 **(4.8)**		
	Heavy Duty	-YHNC	Air Pressure psi **(bar)**	30 **(2.1)**	30 **(2.1)**	35 **(2.4)**	35 **(2.4)**	40 **(2.8)**	40 **(2.8)**	45 **(3.1)**	45 **(3.1)**	45 **(3.1)**	50 **(3.5)**	55 **(3.8)**	36,000 **(2,500)**	0,33
			Spring Pre-compression in. **(mm)**	0.19 **(4.8)**	0.19 **(4.8)**	0.25 **(6.4)**	0.25 **(6.4)**	0.31 **(7.9)**	0.31 **(7.9)**	0.31 **(7.9)**	0.38 **(9.7)**	0.38 **(9.7)**	0.44 **(11.2)**	0.5 **(12.7)**		
			Stem Travel in. **(mm)**	0.19 **(4.8)**	0.19 **(4.8)**	0.19 **(4.8)**	0.19 **(4.8)**	0.19 **(4.8)**	0.19 **(4.8)**	0.19 **(4.8)**	0.19 **(4.8)**	0.19 **(4.8)**	0.19 **(4.8)**	0.19 **(4.8)**		

* Cv values are for straight pattern valves, increase this value by 50% for angle pattern valves.
Cv values vary due to compression of actuator spring, and are adjusted based on system pressure.
Values shown are for maximum to minimum stem travel position.

All technical and dimensional information subject to change. All general Terms and Conditions of sale, including limitations of our liability, apply to all products and services sold.

Valve Series	Air Actuator Type	Ordering Suffix	Data	1-15 (68-1,050)	20 (1,400)	25 (1,800)	30 (2,000)	35 (2,400)	40 (2,800)	45 (3,100)	50 (3,500)	55 (3,800)	60 (4,100)	60 (4,500)	Max. Pressure psi (bar)	Flow Value Cv*
				Air pressure required to open Valve at: System Pressure ksi (bar)												
65V4 & 65V6	Medium Duty	-YMNC	Air Pressure psi **(bar)**	55 **(3.8)**	65 **(4.5)**	65 **(4.5)**	65 **(4.5)**	75 **(5.2)**	75 **(5.2)**	85 **(5.9)**	85 **(5.9)**	85 **(5.9)**	95 **(6.6)**	100 **(6.9)**	65,000 **(4,500)**	0,08
			Spring Pre-compression in. **(mm)**	0.12 **(3)**	0.19 **(4.8)**	0.19 **(4.8)**	0.19 **(4.8)**	0.25 **(6.4)**	0.25 **(6.4)**	0.31 **(7.9)**	0.31 **(7.9)**	0.31 **(7.9)**	0.37 **(9.7)**	0.38 **(9.7)**		
			Stem Travel in. **(mm)**	0.25 **(6.4)**	0.25 **(6.4)**	0.25 **(6.4)**	0.25 **(6.4)**	0.25 **(6.4)**	0.25 **(6.4)**	0.25 **(6.4)**	0.25 **(6.4)**	0.25 **(6.4)**	0.25 **(6.4)**	0.25 **(6.4)**		
	Heavy Duty	-YHNC	Air Pressure psi **(bar)**	30 **(2.1)**	35 **(2.4)**	35 **(2.4)**	35 **(2.4)**	40 **(2.8)**	40 **(2.8)**	45 **(3.1)**	45 **(3.1)**	45 **(3.1)**	50 **(3.5)**	55 **(3.8)**	65,000 **(4,500)**	0,09
			Spring Pre-compression in. **(mm)**	0.12 **(4.8)**	0.19 **(4.8)**	0.19 **(4.8)**	0.19 **(4.8)**	0.25 **(6.4)**	0.25 **(6.4)**	0.31 **(7.9)**	0.31 **(7.9)**	0.31 **(7.9)**	0.38 **(9.7)**	0.44 **(11.2)**		
			Stem Travel in. **(mm)**	0.25 **(6.4)**	0.25 **(6.4)**	0.25 **(6.4)**	0.25 **(6.4)**	0.25 **(6.4)**	0.25 **(6.4)**	0.25 **(6.4)**	0.25 **(6.4)**	0.25 **(6.4)**	0.25 **(6.4)**	0.25 **(6.4)**		
65V9	Medium Duty	-YMNC	Air Pressure psi **(bar)**	55 **(3.8)**	65 **(4.5)**	65 **(4.5)**	75 **(5.2)**	75 **(5.2)**	85 **(5.9)**	95 **(6.6)**	95 **(6.6)**	95 **(6.6)**	95 **(6.6)**	100 **(6.9)**	65,000 **(4,500)**	1.04
			Spring Pre-compression in. **(mm)**	0.12 **(3)**	0.19 **(4.8)**	0.19 **(4.8)**	0.25 **(6.4)**	0.25 **(6.4)**	0.31 **(7.9)**	0.38 **(9.7)**	0.38 **(9.7)**	0.44 **(11.2)**	0.50 **(12.7)**	0.56 **(14.2)**		
			Stem Travel in. **(mm)**	0.25 **(6.4)**	0.25 **(6.4)**	0.25 **(6.4)**	0.25 **(6.4)**	0.25 **(6.4)**	0.25 **(6.4)**	0.25 **(6.4)**	0.25 **(6.4)**	0.19 **(4.8)**	0.12 **(3)**	0.06 **(1.5)**		
	Heavy Duty	-YHNC	Air Pressure psi **(bar)**	30 **(2.1)**	35 **(2.4)**	35 **(2.4)**	40 **(2.8)**	40 **(2.8)**	45 **(3.1)**	50 **(3.5)**	50 **(3.5)**	50 **(3.5)**	50 **(3.5)**	55 **(3.8)**	65,000 **(4,500)**	
			Spring Pre-compression in. **(mm)**	0.12 **(3)**	0.19 **(4.8)**	0.19 **(4.8)**	0.25 **(6.4)**	0.25 **(6.4)**	0.31 **(7.9)**	0.38 **(9.7)**	0.38 **(9.7)**	0.44 **(11.2)**	0.50 **(12.7)**	0.56 **(14.2)**		
			Stem Travel in. **(mm)**	0.25 **(6.4)**	0.25 **(6.4)**	0.25 **(6.4)**	0.25 **(6.4)**	0.25 **(6.4)**	0.25 **(6.4)**	0.25 **(6.4)**	0.25 **(6.4)**	0.19 **(4.8)**	0.12 **(3)**	0.66 **(16.8)**		
				1-10 (68-680)	20 (1,400)	30 (2,000)	40 (2,800)	50 (3,500)	60 (4,100)	70 (4,800)	80 (5,500)	90 (6,200)	101 (7,000)			
101V4 101V5 101V6 101V9	Heavy Duty	-YHNC	Air Pressure psi **(bar)**	35 **(2.4)**	35 **(2.4)**	40 **(2.8)**	40 **(2.8)**	45 **(3.1)**	50 **(3.5)**	55 **(3.8)**	60 **(4.2)**	70 **(4.9)**			90,000 **(6,200)**	0.09-0.07
			Spring Pre-compression in. **(mm)**	0.12 **(3)**	0.12 **(3)**	0.19 **(4.8)**	0.19 **(4.8)**	0.22 **(5.6)**	0.25 **(6.4)**	0.28 **(7.1)**	0.31 **(7.9)**	0.38 **(9.7)**				
			Stem Travel in. **(mm)**	0.12 **(3)**	0.12 **(3)**	0.12 **(3)**	0.12 **(3)**	0.12 **(3)**	0.12 **(3)**	0.12 **(3)**	0.12 **(3)**	0.12 **(3)**				

* Cv values are for straight pattern valves, increase this value by 50% for angle pattern valves.
Cv values vary due to compression of actuator spring, and are adjusted based on system pressure.
Values shown are for maximum to minimum stem travel position.

All technical and dimensional information subject to change. All general Terms and Conditions of sale, including limitations of our liability, apply to all products and services sold.

Ball Valves

» Pressures to 21,000 psi (1,500 bar)

MAXIMATOR ball valves provide superior quality and performance with a variety of valve styles and process connections. All medium and high pressure connections are supplied with glands and collars.

Ball Valves feature:

- One-piece, trunnion mounted style stem design eliminates shear failure found in two-piece stem designs.
- Choice of 3/16”, 1/4”, 3/8” and 1/2” ball orifices provides minimal pressure drops.
- Re-torqueable seat glands for longer seat life and dependability.
- Torlon Ball Seat material offers excellent sealing capabilities.
- 316 cold worked stainless steel body, and 17-4 PH stem offers excellent corrosion resistance.
- Ball valves are available in 90˚ and 180˚ open to close with a positive stop.
- Available with Pneumatic or Electric actuators.
- Available in medium, high, BSP and NPT pressure connections.
- Full materials traceability.
- Safety weep holes for all pressure connections and packing area.

MAXIMATOR offers a complete line of high pressure components to compliment the 2-way and 3-way Ball Valve line.

Note: When selecting multiple items, the pressure rating would be that of the lowest rated component.

Ball Valve Index	Page:
2-Way Ball Valves	2 – 3
3-Way Ball Valves	4 – 5
Pneumatic and Electric Actuators	6 – 10

MAXIMATOR GmbH, Lange Straße 6, 99734 Nordhausen, Telefon +49 (0) 3631 9533 – 0, Telefax + 49 (0) 3631 9533 – 5010, www.maximator.de, info@maximator.de

All technical and dimensional information subject to change. All general Terms and Conditions of sale, including limitations of our liability, apply to all products and services sold.

2-Way Ball Valves

» Pressures to 21,000 psi (1,500 bar)

Ordering Information
Typical catalog number:
21B244M

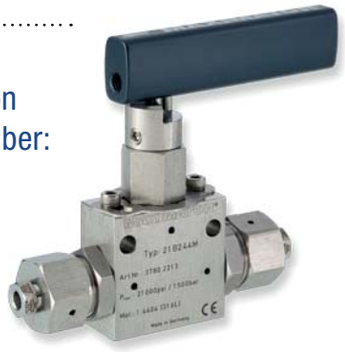

2-Way Ball Valves

2-Way Ball Valves are available with 1/4", 3/8" or 1/2" orifices and are capable of safe handling of liquids and gases up to 21,000 psi **(1,500 bar)** pressure. Their 90° handle rotation allows for full flow capabilities with minimal pressure drop. Robust one-piece trunnion style stem design eliminates shear failure that is found in a two-piece stem design.

Ball seats are made of Torlon material providing excellent sealing capabilities with low handle operating torque. Re-torqueable seat glands provide longer valve life and dependability. Standard valves are supplied with FKM O-Rings rated to 300°F **(150°C)**.

21 Pressure (x 1000 psi)	B2 Valve Series	4 Orifice Diameter	4M Connection Type	Options
10 = 10,000 psi (690 bar)	**B2** = Ball Valve 2-way	**4** = 1/4"	See chart	See Ball Valve Actuators
15 = 15,200 psi (1,050 bar)		**6** = 3/8"	(page 3)	(page 4 & 5)
21 = 21,000 psi (1,500 bar)		**8** = 1/2"		

Manually Operated 2-Way Ball Valve

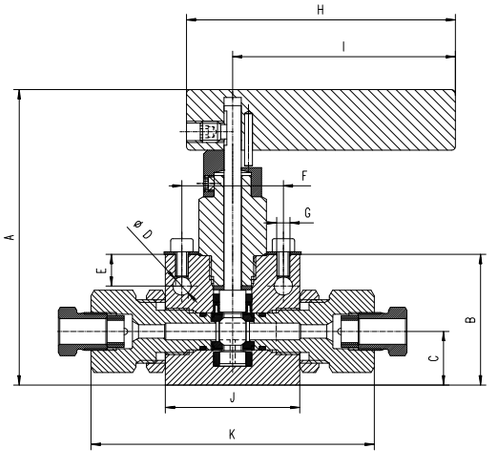

Pressure Temperature Ratings

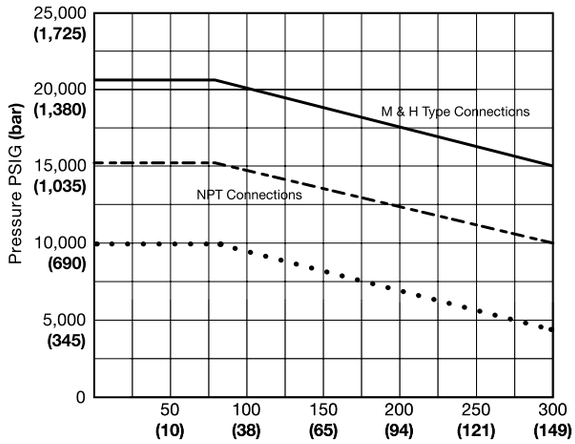

Valve Models	Orifice Size in. (mm)	Dimensions in. (mm) A	B	C	D	E	F	H	I	J	K	Valve Panel hole	Block Thick-ness
15B24	1/4	4.41	1.95	0.80	0.28	0.47	1.52	4.02	3.33	2.01	4.21	1.03	1.02
21B24	**(6.4)**	**(112)**	**(49.5)**	**(20.3)**	**(7)**	**(12)**	**(38.5)**	**(102)**	**(84.5)**	**(51)**	**(107)**	**26.2)**	**(26)**
15B26	3/8	4.96	2.5	1.09	0.28	0.39	2	5.87	5.08	2.99	5.55	1.42	1.38
21B26	**(9.5)**	**(126)**	**(63.5)**	**(27.8)**	**(7)**	**(10)**	**(50.8)**	**(149)**	**(129)**	**(76)**	**(141)**	**(36)**	**(35)**
10B28	1/2	5.9	3.07	1.31	0.28	0.49	3	10.35		4.16	7.76	1.54	1.772
	(12.7)	**(149.8)**	**(78)**	**(33.4)**	**(7)**	**(12.5)**	**(76.2)**	**(263)**		**(105)**	**(197.2)**	**(39)**	**(45)**

G - Panel mounting screw thread size 10-24 UNC (screw included). All dimensions are for reference only and are subject to change.

All technical and dimensional information subject to change. All general Terms and Conditions of sale, including limitations of our liability, apply to all products and services sold.

Orifice Series	Catalog Number	Pressure Rating @ RT psi. (bar)	OD Tubing Size in.	Connection Type	Orifice Size in. (mm)	Cv
1/4“	21B244M	21,000 (1,500)	1/4	4MF	0.106 **(2.7)**	0.25
	21B246M	21,000 (1,500)	3/8	6MF	0.203 **(5.1)**	0.91
	21B249M	21,000 (1,500)	9/16	9MF	0.250 **(6.4)**	1.51
	21B244H	21,000 (1,500)	1/4	4HF	0.094 **(2.4)**	0.20
	21B246H	21,000 (1,500)	3/8	6HF	0.125 **(3.2)**	0.30
	21B249H	21,000 (1,500)	9/16	9HF	0.188 **(4.8)**	0.68
	15B242P	15,200 (1,050)	1/8	FNPT	0.250 **(6.4)**	1.51
	15B244P	15,200 (1,050)	1/4	FNPT	0.250 **(6.4)**	1.51
	15B246P	15,200 (1,050)	3/8	FNPT	0.250 **(6.4)**	1.51
	15B248P	15,200 (1,050)	1/2	FNPT	0.250 **(6.4)**	1.51
	15B242B	15,200 (1,050)	1/8	FBSP	0.250 **(6.4)**	1.51
	15B244B	15,200 (1,050)	1/4	FBSP	0.250 **(6.4)**	1.51
	15B246B	15,200 (1,050)	3/8	FBSP	0.250 **(6.4)**	1.51
	15B248B	15,200 (1,050)	1/2	FBSP	0.250 **(6.4)**	1.51
3/8“	21B266M	21,000 (1,500)	3/8	6MF	0.203 **(5.1)**	0.91
	21B269M	21,000 (1,500)	9/16	9MF	0.307 **(7.8)**	1.91
	21B2612M	21,000 (1,500)	3/4	12MF	0.374 **(9.5)**	3.51
	15B266P	15,200 (1,050)	3/8	FNPT	0.374 **(9.5)**	3.51
	15B268P	15,200 (1,050)	1/2	FNPT	0.374 **(9.5)**	3.51
	15B2612P	15,200 (1,050)	3/4	FNPT	0.374 **(9.5)**	3.51
	15B266B	15,200 (1,050)	3/8	FBSP	0.374 **(9.5)**	3.51
	15B268B	15,200 (1,050)	1/2	FBSP	0.374 **(9.5)**	3.51
	15B2612B	15,200 (1,050)	3/4	FBSP	0.374 **(9.5)**	3.51
1/2“	10B2812M	10,000 (690)	3/4	12MF	0.437 **(11.1)**	4.40
	10B2816M	10,000 (690)	1	16MF	0.500 **(12.7)**	7.60
	10B2812P	10,000 (690)	3/4	FNPT	0.500 **(12.7)**	7.60
	10B2816P	10,000 (690)	1	FNPT	0.500 **(12.7)**	7.60
	10B2812B	10,000 (690)	3/4	FBSP	0.500 **(12.7)**	7.60
	10B2816B	10,000 (690)	1	FBSP	0.500 **(12.7)**	7.60

All dimensions are for reference only and subject to change.

All technical and dimensional information subject to change. All general Terms and Conditions of sale, including limitations of our liability, apply to all products and services sold.

3-Way Ball Valves

» Pressures to 21,000 psi (1,500 bar)

Ordering Information
Typical catalog number: 21B3S34M

3-Way Ball Valves

3-Way Ball Valves have 3/16", 3/8" or 1/2" orifices and are capable of safe handling of liquids and gases up to 21,000 psi **(1,500 bar)** pressure. Robust one-piece trunnion style stem design eliminates shear failure that is found in a two-piece stem design. There are two styles in the 3-way design:

The 180˚ rotating Switching Ball Valve is designed to have fluid enter in through the bottom connection and can be switched to either side connection. Also, the valve can be closed in the center "Off" position.

The 90˚ rotating Diverting Ball Valve is designed to have fluid enter in through the bottom connection and can be diverted to either side connection. There is no center off position in the diverting design.

21 Pressure (x 1000 psi)	B3S Valve Series	3 Orifice Diameter	4M Connection Type	Options
10 = 10,000 psi (690 bar)	**B3S =** 180° Switching	**3** = 3/16"	See chart	See Ball Valve Actuators
15 = 15,200 psi (1,050 bar)	**B3D =** 90° Diverting	**6** = 3/8"	page 5	(page 4 & 5)
21 = 21,000 psi (1,500 bar)		**8** = 1/2"		

Manual 3-Way Ball Valve

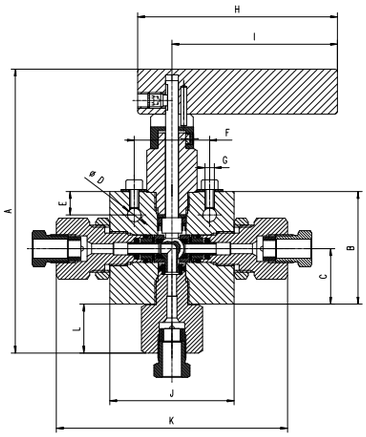

3-Way, 180° Switching Style

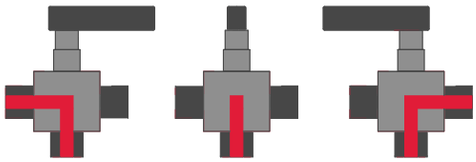

Open **Closed** **Open**

3-Way, 90° Diverting Style

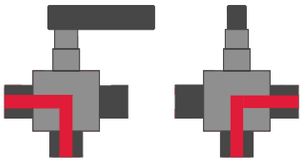

Open **Open**

Valve Models	Orifice Size in. (mm)	Dimensions in. (mm) A	B	C	D	E	F	H	I	J	K	L	Valve Panel hole	Block Thick-ness
15B3D3 15B3S3 21B3D3 21B3S3	3/16 **(4.8)**	5.71 **(145)**	2.26 **(57.5)**	1.11 **(28.3)**	0.28 **(7)**	0.47 **(12)**	1.52 **(38.5)**	4.02 **(102)**	3.33 **(84.5)**	2.5 **(63.5)**	4.65 **(118)**	0.98 **(25)**	1.03 **(26.2)**	1.02 **(26)**
15B3D6 15B3S6	3/8 **(9.5)**	6.55 **(166.4)**	2.89 **(73.3)**	1.50 **(38)**	0.28 **(7)**	0.39 **(10)**	2 **(50.8)**	5.87 **(149)**	5.08 **(129)**	2.99 **(76)**	5.76 **(146.2)**	1.19 **(30.2)**	1.42 **(36)**	1.38 **(35)**
10B3D8 10B3S8	1/2 **(12.7)**	7.83 **(199)**	3.35 **(85.1)**	1.69 **(42.9)**	0.28 **(7)**	0.49 **(12.5)**	3 **(76.2)**	10.2 **(259)**		4.13 **(105)**	7.78 **(191.5)**	1.7 **(43.2)**	1.81 **(43.2)**	1.77 **(45)**

G - Panel mounting screw thread size 10-24 UNC (screw included). All dimensions are for reference only and are subject to change.

All technical and dimensional information subject to change. All general Terms and Conditions of sale, including limitations of our liability, apply to all products and services sold.

Orifice Series	Catalog Number 3-Way 180° Switching	Catalog Number 3-Way 90° Diverting	Pressure Rating @ RT psi. (bar)*	OD Tubing Size in.	Connection Type	Orifice Size in. (mm)	Cv
3/16“	21B3S34M	21B3D34M	21,000 (1,500)	1/4	4MF	0.106 **(2.7)**	0.20
	21B3S36M	21B3D36M	21,000 (1,500)	3/8	6MF	0.188 **(4.8)**	0.50
	21B3S39M	21B3D39M	21,000 (1,500)	9/16	9MF	0.188 **(4.8)**	0.50
	21B3S34H	21B3D34H	21,000 (1,500)	1/4	4HF	0.091 **(2.3)**	0.15
	21B3S36H	21B3D36H	21,000 (1,500)	3/8	6HF	0.125 **(3.2)**	0.30
	21B3S39H	21B3D39H	21,000 (1,500)	9/16	9HF	0.188 **(4.8)**	0.50
	15B3S32P	15B3D32P	15,200 (1,050)	1/8	FNPT	0.188 **(4.8)**	0.50
	15B3S34P	15B3D34P	15,200 (1,050)	1/4	FNPT	0.188 **(4.8)**	0.50
	15B3S36P	15B3D36P	15,200 (1,050)	3/8	FNPT	0.188 **(4.8)**	0.50
	15B3S38P	15B3D38P	15,200 (1,050)	1/2	FNPT	0.188 **(4.8)**	0.50
	15B3S32B	15B3D32B	15,200 (1,050)	1/8	FBSP	0.188 **(4.8)**	0.50
	15B3S34B	15B3D34B	15,200 (1,050)	1/4	FBSP	0.188 **(4.8)**	0.50
	15B3S36B	15B3D36B	15,200 (1,050)	3/8	FBSP	0.188 **(4.8)**	0.50
	15B3S38B	15B3D38B	15,200 (1,050)	1/2	FBSP	0.188 **(4.8)**	0.50
3/8“	15B3S69M	15B3D69M	15,200 (1,050)	9/16	9MF	0.307 **(7.8)**	1.65
	15B3S612M	15B3D612M	15,200 (1,050)	3/4	12MF	0.322 **(8.2)**	2.10
	15B3S64P	15B3D64P	15,200 (1,050)	3/8	FNPT	0.250 **(6.4)**	2.10
	15B3S66P	15B3D66P	15,200 (1,050)	1/2	FNPT	0.250 **(6.4)**	2.10
	15B3S68P	15B3D68P	15,200 (1,050)	3/4	FNPT	0.322 **(8.2)**	2.10
	15B3S64B	15B3D64B	15,200 (1,050)	3/8	FBSP	0.250 **(6.4)**	2.10
	15B3S66B	15B3D66B	15,200 (1,050)	1/2	FBSP	0.250 **(6.4)**	2.10
	15B3S68B	15B3D68B	15,200 (1,050)	3/4	FBSP	0.322 **(8.2)**	2.10
1/2“	10B3S812M	10B3D812M	10,000 (690)	3/4	12MF	0.437 **(11.1)**	3.90
	10B3S816M	10B3D816M	10,000 (690)	1	16MF	0.494 **(12.5)**	4.40
	10B3S812P	10B3D812P	10,000 (690)	3/4	FNPT	0.494 **(12.5)**	4.40
	10B3S816P	10B3D816P	10,000 (690)	1	FNPT	0.494 **(12.5)**	4.40
	10B3S812B	10B3D812B	10,000 (690)	3/4	FBSP	0.494 **(12.5)**	4.40
	10B3S816B	10B3D816B	10,000 (690)	1	FBSP	0.494 **(12.5)**	4.40

* Maximum side connection inlet pressure is 15,000 psig.
All dimensions are for reference only and subject to change. See page 2 for pressure/temperature rating chart.

All technical and dimensional information subject to change. All general Terms and Conditions of sale, including limitations of our liability, apply to all products and services sold.

Ball Valve Actuators

» Pneumatic Actuators - 1/4“ Two Way, 3/16“ Three Way

Pneumatic Actuator Features

- Pneumatic actuators are designed to be used with 2-way & 3-way style ball valves for remote operation.
- Two styles available:
  Double acting: (air to open / air to close)
  Single acting: (air to open / spring to close)
- Optional limit switches with visual indication available.
- Actuators are anodized aluminum, which provides good corrosion resistance. Stainless steel material is available upon request.
- Maximum operating air pressure is 145 psi **(10 bar)**.
- Inlet air supply connection is 1/8” FNPT
- Actuator operating temperature:
  -4˚F to 203˚F **(-20°C to 95°C)**.
- Minimal required air pressure is 80 psi **(5.5 bar)**.
- Opening & closing time is less than one second.

Ordering Information

Simply add suffiix to the manual ball valve catalog number:

DA = Double Acting Air Actuators

SA = Single Acting Air Actuators

Air Operated 2-Way Ball Valve

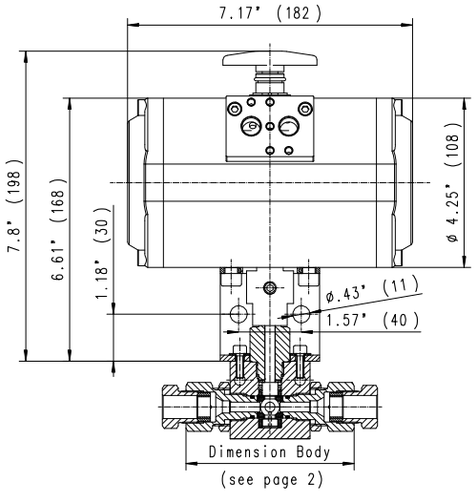

Air Operated 3-Way Ball Valve, 90° Diverter Style

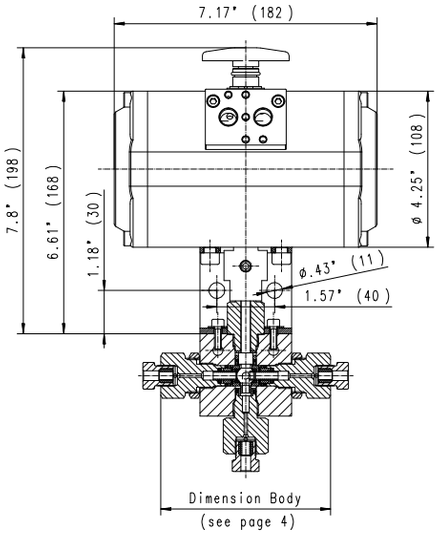

Air Operated 3-Way Ball Valve, 180° Switching Style

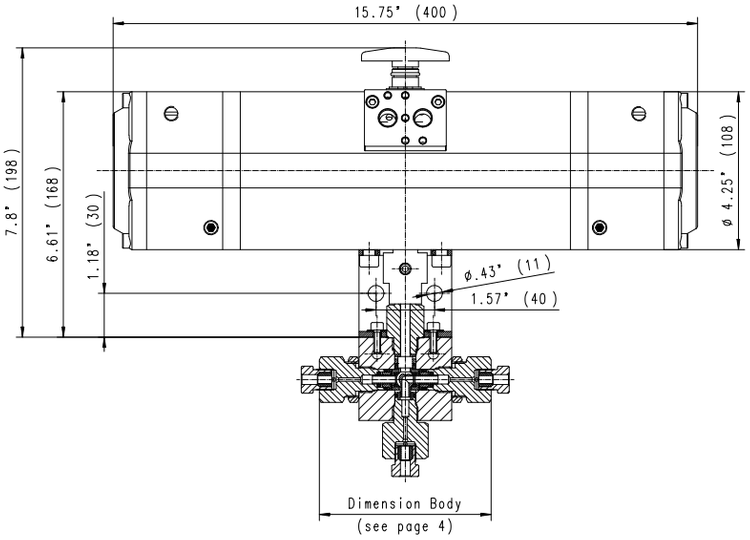

All dimensions are for reference only and subject to change.

All technical and dimensional information subject to change. All general Terms and Conditions of sale, including limitations of our liability, apply to all products and services sold.

» Electric Actuators - 1/4“ Two Way, 3/16“ Three Way

Electric Actuator Features

- Electric actuators are designed to be used with 2-way & 3-way style ball valves for remote operation.
- Actuators will accept a wide range of single phase input voltages from 12 to 240 volts DC or AC current.
- Optional limit switches with visual indication available.
- Manual override option is standard.
- Actuators are made with polyamide material, which provides good corrosion resistance.
- Actuator operating temperature: -0˚F to 160˚F **(-18°C to 70°C)**.
- Opening & closing time is less than ten seconds with 90° actuators.

Ordering Information

Simply add suffiix to the manual ball valve catalog number:

EA = Electric Actuator, 12 - 240 Volts AC or DC

Electrically Operated 2-Way Ball Valve

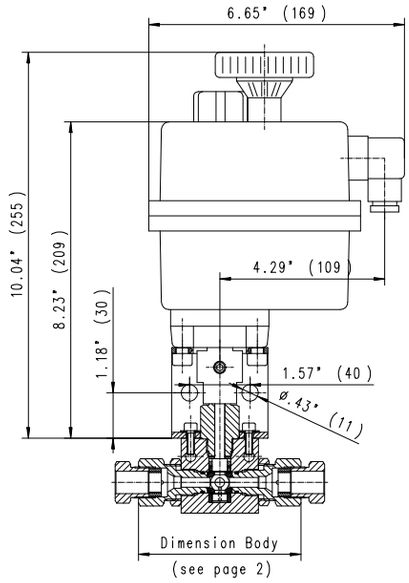

Electrically Operated 3-Way Ball Valve

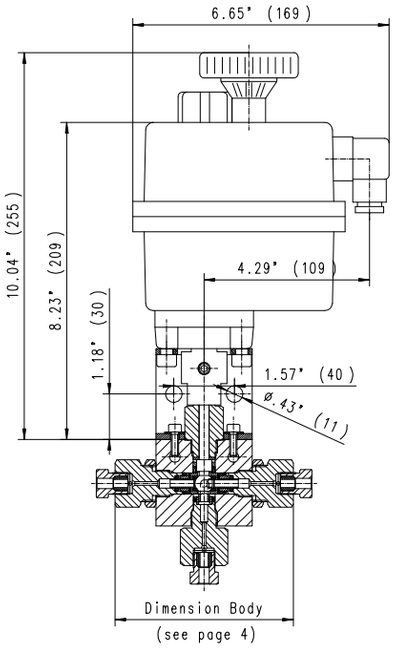

All dimensions are for reference only and subject to change.

All technical and dimensional information subject to change. All general Terms and Conditions of sale, including limitations of our liability, apply to all products and services sold.

Ball Valve Actuators

» Pneumatic Actuators - 3/8“ Two Way, 3/8“ Three Way

Pneumatic Actuator Features

- Pneumatic actuators are designed to be used with 2-way & 3-way style ball valves for remote operation.
- Two styles available:
  Double acting: (air to open / air to close)
  Single acting: (air to open / spring to close)
- Optional limit switches with visual indication available.
- Actuators are anodized aluminum, which provides good corrosion resistance. Stainless steel material is available upon request.
- Maximum operating air pressure is 145 psi **(10 bar)**.
- Inlet air supply connection is 1/8” FNPT
- Actuator operating temperature:
  -4˚F to 203˚F **(-20°C to 95°C)**.
- Minimal required air pressure is 80 psi **(5.5 bar)**.
- Opening & closing time is less than one second.

Ordering Information

Simply add suffiix to the manual ball valve catalog number:

DA = Double Acting Air Actuators

SA = Single Acting Air Actuators

Air Operated 2-Way Ball Valve

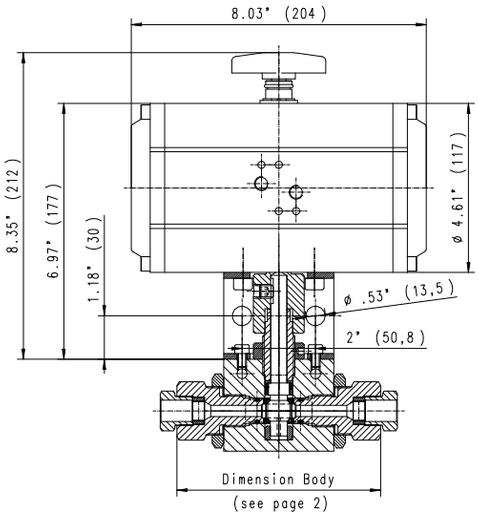

Air Operated 3-Way Ball Valve, 90° Diverter Style

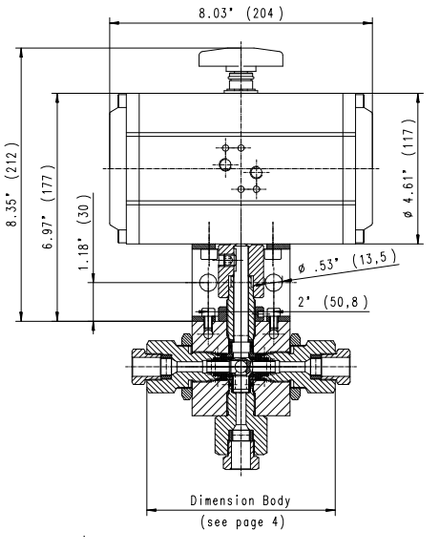

Air Operated 3-Way Ball Valve, 180° Switching Style

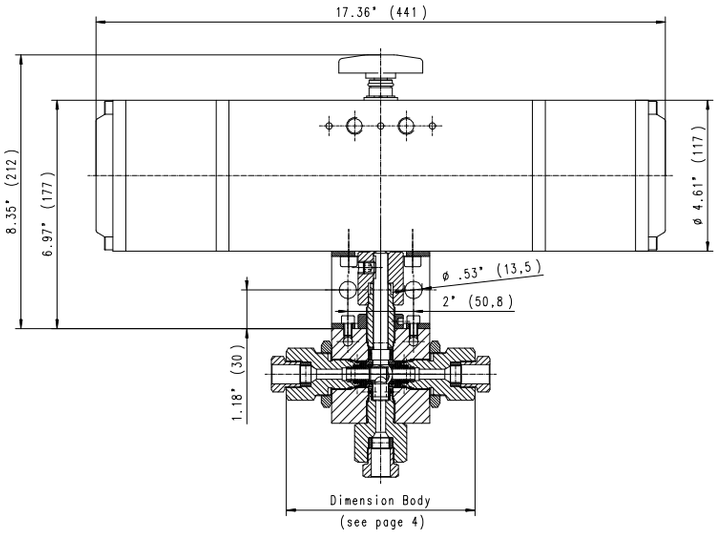

All dimensions are for reference only and subject to change.

All technical and dimensional information subject to change. All general Terms and Conditions of sale, including limitations of our liability, apply to all products and services sold.

» Electric Actuators - 3/8“ Two Way, 3/8“ Three Way

Electric Actuator Features

- Electric actuators are designed to be used with 2-way & 3-way style ball valves for remote operation.
- Actuators will accept a wide range of single phase input voltages from 12 to 240 volts DC or AC current.
- Optional limit switches with visual indication available.
- Manual override option is standard.
- Actuators are made with polyamide material, which provides good corrosion resistance.
- Actuator operating temperature: -0˚F to 160˚F **(-18°C to 70°C)**.
- Opening & closing time is less than ten seconds with 90° actuators.

Ordering Information

Simply add suffiix to the manual ball valve catalog number:

EA = Electric Actuator, 12 - 240 Volts AC or DC

Electrically Operated 2-Way Ball Valve

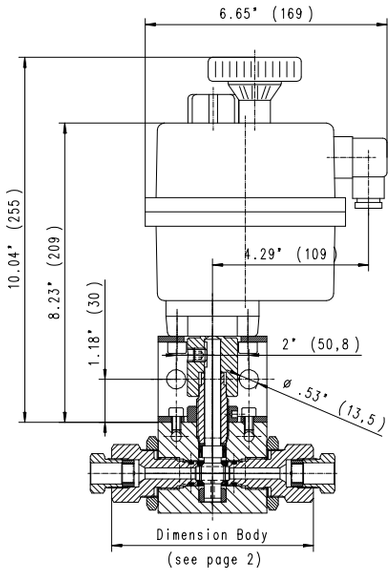

Electrically Operated 3-Way Ball Valve

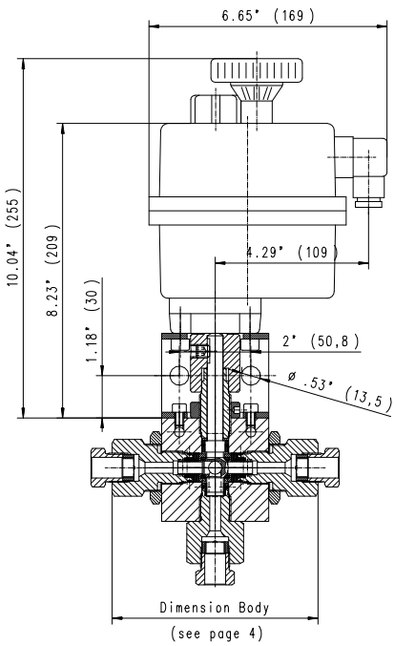

All dimensions are for reference only and subject to change.

All technical and dimensional information subject to change. All general Terms and Conditions of sale, including limitations of our liability, apply to all products and services sold.

Ball Valve Actuators

» Pneumatic Actuators - 1/2“ Two Way, 1/2“ Three Way

Pneumatic Actuator Features

- Pneumatic actuators are designed to be used with 2-way & 3-way style ball valves for remote operation.
- Two styles available:
  Double acting: (air to open / air to close)
  Single acting: (air to open / spring to close)
- Optional limit switches with visual indication available.
- Actuators are anodized aluminum, which provides good corrosion resistance. Stainless steel material is available upon request.
- Maximum operating air pressure is 145 psi **(10 bar)**.
- Inlet air supply connection is 1/8” FNPT
- Actuator operating temperature:
  -4˚F to 203˚F **(-20°C to 95°C)**.
- Minimal required air pressure is 80 psi **(5.5 bar)**.
- Opening & closing time is less than one second.

Ordering Information

Simply add suffiix to the manual ball valve catalog number:

DA = Double Acting Air Actuators

SA = Single Acting Air Actuators

Air Operated 2-Way Ball Valve

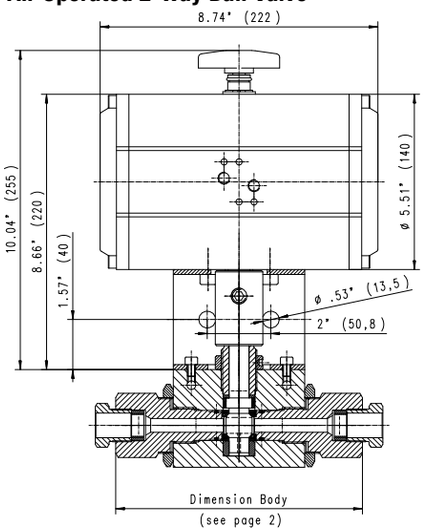

Air Operated 3-Way Ball Valve, 90° Diverter Style

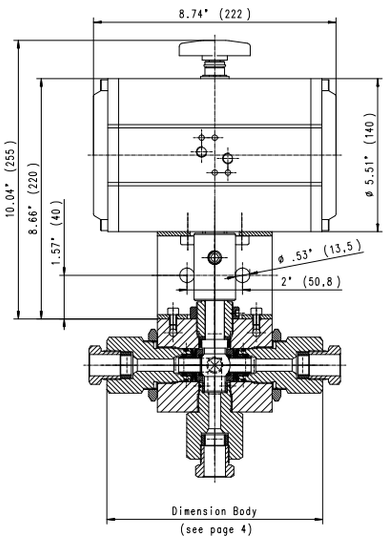

Air Operated 3-Way Ball Valve, 180° Switching Style

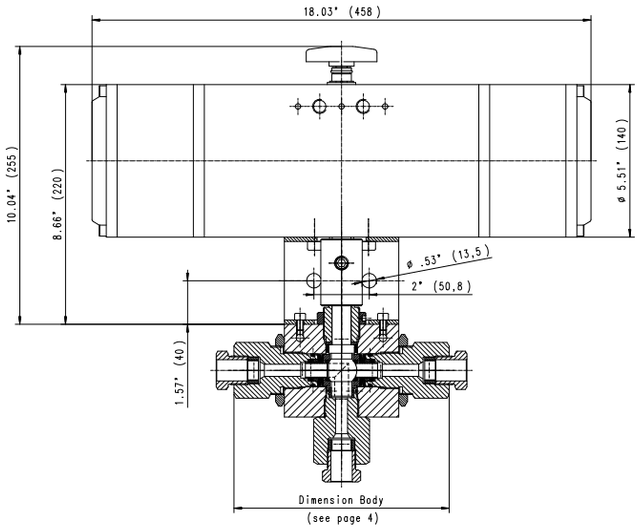

All dimensions are for reference only and subject to change.

All technical and dimensional information subject to change. All general Terms and Conditions of sale, including limitations of our liability, apply to all products and services sold.

» Electric Actuators - 1/2“ Two Way, 1/2“ Three Way

Electric Actuator Features

- Electric actuators are designed to be used with 2-way & 3-way style ball valves for remote operation.
- Actuators will accept a wide range of single phase input voltages from 12 to 240 volts DC or AC current.
- Optional limit switches with visual indication available.
- Manual override option is standard.
- Actuators are made with polyamide material, which provides good corrosion resistance.
- Actuator operating temperature: -0˚F to 160˚F **(-18°C to 70°C)**.
- Opening & closing time is less than ten seconds with 90° actuators.

Ordering Information

Simply add suffiix to the manual ball valve catalog number:

EA = Electric Actuator, 12 - 240 Volts AC or DC

Electrically Operated 2-Way Ball Valve

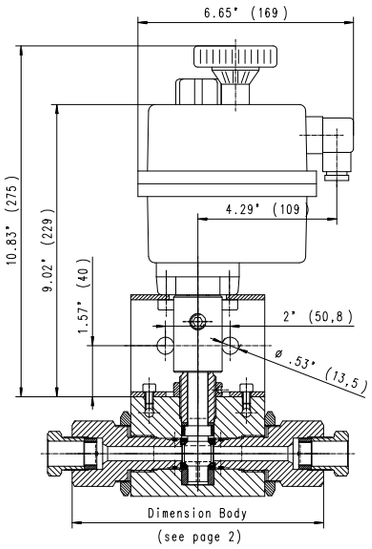

Electrically Operated 3-Way Ball Valve

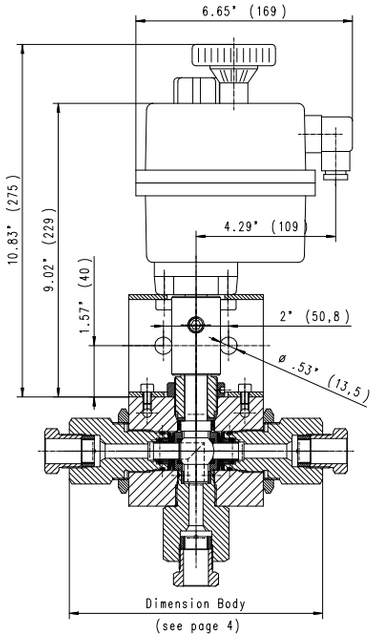

All dimensions are for reference only and subject to change.

All technical and dimensional information subject to change. All general Terms and Conditions of sale, including limitations of our liability, apply to all products and services sold.

Valves, Fittings and Tubing for Sour Gas Applications

» Pressures to 30,000 psi (2,070 bar)

MAXIMATOR has been designing and manufacturing high pressure equipment for more than thirty years and has a worldwide reputation for quality and reliability, backed by one of the best service organizations in the industry.

Oil & Gas Products feature:

- Rising stem design, both solid and 2piece configuration are available.
- All pressure-containing materials comply with the requirements of NACE MR0175.
- Annealed 316 L (1.4404) wetted parts and 17-4 PH Stem (or N05500 for one piece stem) for excellent corrosion resistance.
- Metal-to-metal seating achieves bubble-tight shut-off, longer stem and seat life, greater durability for repeated open and close cycles.
- PTFE and carbon packing with metal back-up rings offers reliable stem to body sealing.
- Safety weep holes for all pressure connections and packing area.
- Six different valve body patterns, with choice of vee or regulating type stem tip.

MAXIMATOR offers a complete line of high pressure valves, fittings, tubing, check valves and line filters for standard oil field service where H2S is present. All high pressure valves and fittings use the high pressure style connection.

Note: When selecting multiple items, the pressure rating would be that of the lowest rated component.

Member NACE INTERNATIONAL THE CORROSION SOCIETY ®

Index	Page:
Valves rated to 22,500 psi **(1,550 bar)**	2 – 3
Valves rated to 30,000 psi **(2,070 bar)**	4 – 5
Fittings	6 – 7
Check Valves	8
Line Filters	9
Sour Gas Adapters and Couplings	10 – 13
Tubing	14
Coned and Threaded Nipples	15

MAXIMATOR GmbH, Lange Straße 6, 99734 Nordhausen, Telefon +49 (0) 3631 9533 – 0, Telefax + 49 (0) 3631 9533 – 5010, www.maximator.de, info@maximator.de

All technical and dimensional information subject to change. All general Terms and Conditions of sale, including limitations of our liability, apply to all products and services sold.

High Pressure Valves for Sour Gas Applications

» Pressures to 22,500 psi (1,550 bar)

Ordering Information
Typical catalog number:
22V4H071-SOG

Sour Gas Valves

Maximator Sour Gas Valves are designed for oil and gas service where H_2S is present. All pressure containing components are made from annealed 316 stainless steel material in compliance with NACE MR0175. These needle valves with metal to metal seats have a high level of safety and reliability under harsh operating conditions. These valves may be used both with gases and liquids.

Traceability is ensured through extensively documented data (batch number, maximum pressure, material number, type designation). All Sour Gas components are supplied with collars and glands unless otherwise specified.

22 V Valve Series	4H O.D. Tube Size	07 Stem Type	1 Body Pattern	SOG- Sour Gas
22 V	**4H** – 1/4”	**00** – One piece rotating Vee stem	**1** – two-way straight	SOGWO–
	6H – 3/8”	**01** – One piece rotating Regulating stem	**2** – two-way angle	Sour Gas
	9H – 9/16”	**07** – non rotating Vee stem (on-off service)	**3** – three-way, two on pressure	without
		08 – non rotating Regulating stem	**4** – three-way, one on pressure	Glands &
		(tapered tip for regulating and shut-off)	**5** – three-way, two-stem manifold	Collars
		80 – One piece Vee stem with replaceable seat		
		81 – One piece Regulating stem with replaceable seat		

O.D. Size in. (mm)	Connec-tion Type	Orifice Size in. (mm)	Rated Cv*	Pressure Rating @ R.T. psi (bar)**
1/4 **(6.35)**	4HF	0.094 **(2.3)**	0.12	22,500 **(1,550)**
3/8 **(9.53)**	6HF	0.125 **(3.2)**	0.23	22,500 **(1,550)**
9/16 **(14.30)**	9HF	0.125 **(3.2)**	0.33	22,500 **(1,550)**

Consult your MAXIMATOR representative for **repair kits** and valve bodies. Refer to the Tools and Installation section for proper maintenance procedures.

* Cv values shown are for 2-way straight pattern vee stem valves.
For 2-way angle patterns, increase the Cv value by 50%.

** See page 2 in the Technical Section for Pressure/Temperature Rating Chart.

All technical and dimensional information subject to change. All general Terms and Conditions of sale, including limitations of our liability, apply to all products and services sold.

Valve Pattern	Catalog Number	Stem Type	O.D. Tube in.	Orifice in. (mm)	Dimensions in. (mm) A	B	C	D	E	F	H	I	J	K	Valve Panel Hole	Block Thick-ness
2-Way Straight																
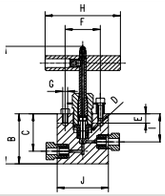	22V4H001-SOG	Vee	1/4	0.094 (2.3)	4.96 (126)	2.01 (51)	1.50 (38)	0.22 (5.6)	0.37 (9.5)	1.38 (35)	2.95 (75)	1.12 (28.5)	2.01 (51)		1.00 (25.4)	1.02 (25.9)
	22V4H081-SOG	Reg														
	22V6H001-SOG	Vee	3/8	0.125 (3.2)	4.96 (126)	2.01 (51)	1.50 (38)	0.22 (5.6)	0.37 (9.5)	1.38 (35)	2.95 (75)	1.12 (28.5)	2.01 (51)		1.00 (25.4)	1.02 (25.9)
	22V6H081-SOG	Reg														
	22V9H001-SOG	Vee	9/16	0.125 (3.2)	5.00 (127)	2.44 (62)	1.56 (39.6)	0.22 (5.6)	0.37 (9.5)	1.38 (35)	2.95 (75)	1.12 (28.5)	2.64 (57)		1.00 (25.4)	1.54 (39.1)
	22V9H001-SOG	Reg														
2-Way Angle																
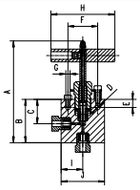	22V4H002-SOG	Vee	1/4	0.094 (2.3)	4.96 (126)	2.01 (51)	1.12 (28.5)	0.22 (5.6)	0.37 (9.5)	1.38 (35)	2.95 (75)	1.00 (25.4)	2.01 (51)		1.00 (25.4)	1.02 (25.9)
	22V4H082-SOG	Reg														
	22V6H002-SOG	Vee	3/8	0.125 (3.2)	4.78 (121.5)	2.20 (56)	1.10 (28)	0.22 (5.6)	0.37 (9.5)	1.38 (35)	2.95 (75)	1.00 (25.4)	2.01 (51)		1.00 (25.4)	1.02 (25.9)
	22V6H082-SOG	Reg														
	22V9H002-SOG	Vee	9/16	0.125 (3.2)	5.00 (127)	2.44 (62)	1.12 (28.5)	0.22 (5.6)	0.37 (9.5)	1.38 (35)	2.95 (75)	1.32 (33.5)	2.64 (57)		1.00 (25.4)	1.54 (39.1)
	22V9H082-SOG	Reg														
3-Way / 2 on Pressure																
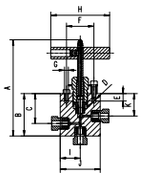	22V4H003-SOG	Vee	1/4	0.094 (2.3)	4.96 (119.1)	2.13 (54.1)	1.50 (38)	0.22 (5.6)	0.37 (9.5)	1.38 (35)	2.95 (75)	1.00 (25.4)	2.01 (51)	1.12 (28.5)	1.00 (25.4)	1.02 (25.9))
	22V4H083-SOG	Reg														
	22V6H003-SOG	Vee	3/8	0.125 (3.2)	5.08 (129)	2.50 (63.5)	1.50 (38)	0.22 (5.6)	0.37 (9.5)	1.38 (35)	2.95 (75)	1.00 (25.4)	2.01 (51)	1.12 (28.5)	1.00 (25.4)	1.02 (25.9)
	22V6H083-SOG	Reg														
	22V9H003-SOG	Vee	9/16	0.125 (3.2)	5.45 (138.5)	2.87 (72.9)	1.56 (39.5)	0.22 (5.6)	0.37 (9.5)	1.38 (35)	2.95 (75)	1.32 (33.5)	2.64 (67)	1.12 (28.5)	1.00 (25.4)	1.54 (39.1)
	22V9H083-SOG	Reg														
3-Way / 1 on Pressure																
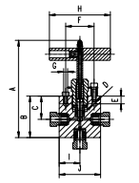	22V4H004-SOG	Vee	1/4	0.094 (2.3)	4.96 (126)	2.01 (51)	1.12 (28.5)	0.22 (5.6)	0.37 (9.5)	1.38 (35)	2.95 (75)	1.00 (25.4)	2.01 (51)		1.00 (25.4)	1.02 (25.9)
	22V4H084-SOG	Reg														
	22V6H004-SOG	Vee	3/8	0.125 (3.2)	4.76 (121)	2.20 (56)	1.12 (28.5)	0.22 (5.6)	0.37 (9.5)	1.38 (35)	2.95 (75)	1.00 (25.4)	2.01 (51)		1.00 (25.4)	1.02 (25.9)
	22V6H084-SOG	Reg														
	22V9H004-SOG	Vee	9/16	0.125 (3.2)	5.00 (127)	2.44 (62)	1.12 (28.5)	0.22 (5.6)	0.37 (9.5)	1.38 (35)	2.95 (75)	1.32 (33.5)	2.64 (67)		1.00 (25.4)	1.54 (39.1)
	22V9H084-SOG	Reg														
3-Way / 2-Stem Manifold																
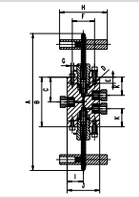	22V4H005-SOG	Vee	1/4	0.094 (2.3)	8.23 (209)	3.07 (78)	1.54 (39.1)	0.22 (5.6)	0.37 (9.5)	1.38 (35)	2.95 (75)	1.00 (25.4)	2.01 (51)	1.12 (28.5)	1.00 (25.4)	1.02 (25.9)
	22V4H085-SOG	Reg														
	22V6H005-SOG	Vee	3/8	0.125 (3.2)	8.39 (213)	3.25 (82.5)	1.61 (40.9)	0.22 (5.6)	0.37 (9.5)	1.38 (35)	2.95 (75)	1.00 (25.4)	2.01 (51)	1.12 (28.5)	1.00 (25.4)	1.02 (25.9)
	22V6H085-SOG	Reg														
	22V9H005-SOG	Vee	9/16	0.125 (3.2)	8.90 (226)	3.74 (95)	1.88 (47.8)	0.22 (5.6)	0.37 (9.5)	1.38 (35)	2.95 (75)	1.32 (33.5)	2.64 (67)	1.12 (28.5)	1.00 (25.4)	1.54 (39.1)
	22V9H085-SOG	Reg														
2-Way Angle / Replaceable Seat																
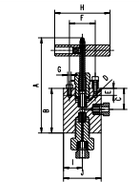	22V4H802-SOG	Vee	1/4	0.094 (2.3)	4.96 (126)	2.38 (60.5)	1.12 (28.5)	0.22 (5.6)	0.37 (9.5)	1.38 (35)	2.95 (75)	1.00 (25.4)	2.01 (51)		1.00 (25.4)	1.02 (25.9)
	22V4H882-SOG	Reg														
	22V6H802-SOG	Vee	3/8	0.125 (3.2)	4.96 (126)	2.38 (60.5)	1.12 (28.5)	0.22 (5.6)	0.37 (9.5)	1.38 (35)	2.95 (75)	1.00 (25.4)	2.01 (51)		1.00 (25.4)	1.02 (25.9)
	22V6H882-SOG	Reg														
	22V9H802-SOG	Vee	9/16	0.125 (3.2)	5.00 (127)	2.44 (62)	1.18 (30)	0.22 (5.6)	0.37 (9.5)	1.38 (35)	2.95 (75)	1.32 (33.5)	2.64 (57)		1.00 (25.4)	1.54 (39.1)
	22V9H882-SOG	Reg														

G - Panel mounting screw thread size 10-24 UNC (screw included). All dimensions are for reference only and are subject to change.

All technical and dimensional information subject to change. All general Terms and Conditions of sale, including limitations of our liability, apply to all products and services sold.

High Pressure Valves for Sour Gas Applications

» Pressures to 30,000 psi (2,070 bar)

Ordering Information
Typical catalog number:
30V4H071-SOG

Sour Gas Valves

Maximator Sour Gas Valves are designed for oil and gas service where H_2S is present. All pressure containing components are made from annealed 316 stainless steel material in compliance with NACE MR0175. These needle valves with metal to metal seats have a high level of safety and reliability under harsh operating conditions. These valves may be used both with gases and liquids.

Traceability is ensured through extensively documented data (batch number, maximum pressure, material number, type designation). All Sour Gas components are supplied with collars and glands unless otherwise specified.

30 V Valve Series	4H O.D. Tube Size	07 Stem Type	1 Body Pattern	SOG- Sour Gas
30 V	**4H** – 1/4”	**00** – One piece rotating Vee stem	**1** – two-way straight	SOGWO–
	6H – 3/8”	**01** – One piece rotating Regulating stem	**2** – two-way angle	Sour Gas
	9H – 9/16”	**07** – non rotating Vee stem (on-off service)	**3** – three-way, two on pressure	without
		08 – non rotating Regulating stem	**4** – three-way, one on pressure	Glands &
		(tapered tip for regulating and shut-off)	**5** – three-way, two-stem manifold	Collars
		80 – One piece Vee stem with replaceable seat		
		81 – One piece Regulating stem with replaceable seat		

O.D. Size in. (mm)	Connec-tion Type	Orifice Size in. (mm)	Rated Cv*	Pressure Rating @ R.T. psi (bar)**
1/4 **(6.35)**	4HF	0.062 **(1.6)**	0.08	30,000 **(2,070)**
3/8 **(9.53)**	6HF	0.062 **(1.6)**	0.09	30,000 **(2,070)**
9/16 **(14.30)**	9HF	0.078 **(2.0)**	0.14	30,000 **(2,070)**

* Cv values shown are for 2-way straight pattern vee stem valves.
For 2-way angle patterns, increase the Cv value by 50%.

** See page 2 in the Technical Section for Pressure/Temperature Rating Chart.

Consult your MAXIMATOR representative for **repair kits** and valve bodies. Refer to the Tools and Installation section for proper maintenance procedures.

All technical and dimensional information subject to change. All general Terms and Conditions of sale, including limitations of our liability, apply to all products and services sold.

Valve Pattern	Catalog Number	Stem Type	O.D. Tube in.	Orifice in. (mm)	Dimensions in. (mm) A	B	C	D	E	F	H	I	J	K	Valve Panel Hole	Block Thick-ness
2-Way Straight																
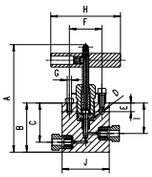	30V4H001-SOG	Vee	1/4	0.062 (1.6)	4.67 (118.6)	2.13 (54.1)	1.96 (43)	0.22 (5.6)	0.37 (9.5)	1.38 (35)	2.95 (75)	1.32 (33.5)	2.01 (51)		1.00 (25.4)	1.02 (25.9)
	30V4H081-SOG	Reg														
	30V6H001-SOG	Vee	3/8	0.062 (1.6)	4.80 (122)	2.24 (56.9)	1.96 (43)	0.22 (5.6)	0.37 (9.5)	1.38 (35)	2.95 (75)	1.32 (33.5)	2.01 (51)		1.00 (25.4)	1.02 (25.9)
	30V6H081-SOG	Reg														
	30V9H001-SOG	Vee	9/16	0.078 (2)	5.04 (128)	2.50 (63.5)	1.75 (44.5)	0.22 (5.6)	0.37 (9.5)	1.38 (35)	2.95 (75)	1.30 (33)	2.64 (57)		1.00 (25.4)	1.54 (39.1)
	30V9H081-SOG	Reg														
2-Way Angle																
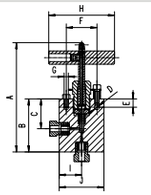	30V4H002-SOG	Vee	1/4	0.062 (1.6)	4.96 (126)	2.38 (60.5)	1.34 (34)	0.22 (5.6)	0.37 (9.5)	1.38 (35)	2.95 (75)	1.00 (25.4)	2.01 (51)		1.00 (25.4)	1.02 (25.9)
	30V4H082-SOG	Reg														
	30V6H002-SOG	Vee	3/8	0.062 (1.6)	5.16 (131)	2.62 (66.5)	1.32 (33.5)	0.22 (5.6)	0.37 (9.5)	1.38 (35)	2.95 (75)	1.00 (25.4)	2.01 (51)		1.00 (25.4)	1.02 (25.9)
	30V6H082-SOG	Reg														
	30V9H002-SOG	Vee	9/16	0.078 (2)	5.35 (136)	2.80 (71.1)	1.32 (33.5)	0.22 (5.6)	0.37 (9.5)	1.38 (35)	2.95 (75)	1.32 (33.5)	2.64 (57)		1.00 (25.4)	1.54 (39.1)
	30V9H082-SOG	Reg														
3-Way / 2 on Pressure																
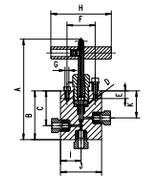	30V4H003-SOG	Vee	1/4	0.062 (1.6)	4.96 (126)	2.38 (60.5)	1.69 (43)	0.22 (5.6)	0.37 (9.5)	1.38 (35)	2.95 (75)	1.00 (25.4)	2.01 (51)	1.32 (33.5)	1.00 (25.4)	1.02 (25.9))
	30V4H083-SOG	Reg														
	30V6H003-SOG	Vee	3/8	0.062 (1.6)	5.31 (134.9)	2.76 (70.1)	1.69 (43)	0.22 (5.6)	0.37 (9.5)	1.38 (35)	2.95 (75)	1.00 (25.4)	2.01 (51)	1.32 (33.5)	1.00 (25.4)	1.02 (25.9)
	30V6H083-SOG	Reg														
	30V9H003-SOG	Vee	9/16	0.078 (2)	5.71 (145)	3.15 (80)	1.75 (44.5)	0.22 (5.6)	0.37 (9.5)	1.38 (35)	2.95 (75)	1.32 (33.5)	2.64 (67)	1.30 (33)	1.00 (25.4)	1.54 (39.1)
	30V9H083-SOG	Reg														
3-Way / 1 on Pressure																
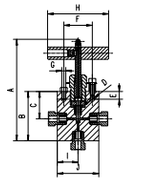	30V4H004-SOG	Vee	1/4	0.062 (1.6)	4.96 (126)	2.38 (60.5)	1.32 (33.5)	0.22 (5.6)	0.37 (9.5)	1.38 (35)	2.95 (75)	1.00 (25.4)	2.01 (51)		1.00 (25.4)	1.02 (25.9)
	30V4H084-SOG	Reg														
	30V6H004-SOG	Vee	3/8	0.062 (1.6)	5.16 (131)	2.62 (66.5)	1.32 (33.5)	0.22 (5.6)	0.37 (9.5)	1.38 (35)	2.95 (75)	1.00 (25.4)	2.01 (51)		1.00 (25.4)	1.02 (25.9)
	30V6H084-SOG	Reg														
	30V9H004-SOG	Vee	9/16	0.078 (2)	5.35 (136)	2.80 (71.1)	1.32 (33.5)	0.22 (5.6)	0.37 (9.5)	1.38 (35)	2.95 (75)	1.32 (33.5)	2.64 (67)		1.00 (25.4)	1.54 (39.1)
	30V9H084-SOG	Reg														
3-Way / 2-Stem Manifold																
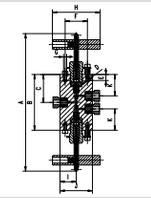	30V4H005-SOG	Vee	1/4	0.062 (1.6)	8.56 (217.4)	3.44 (87.4)	1.72 (43.7)	0.22 (5.6)	0.37 (9.5)	1.38 (35)	2.95 (75)	1.00 (25.4)	2.01 (51)	1.32 (33.5)	1.00 (25.4)	1.02 (25.9)
	30V4H085-SOG	Reg														
	30V6H005-SOG	Vee	3/8	0.062 (1.6)	8.56 (217.4)	3.76 (95.5)	1.89 (48)	0.22 (5.6)	0.37 (9.5)	1.38 (35)	2.95 (75)	1.00 (25.4)	2.01 (51)	1.32 (33.5)	1.00 (25.4)	1.02 (25.9)
	30V6H085-SOG	Reg														
	30V9H005-SOG	Vee	9/16	0.078 (2)	9.25 (235)	4.13 (105)	2.07 (52.6)	0.22 (5.6)	0.37 (9.5)	1.38 (35)	2.95 (75)	1.32 (33.5)	2.64 (67)	1.30 (33)	1.00 (25.4)	1.54 (39.1)
	30V9H085-SOG	Reg														
2-Way Angle / Replaceable Seat																
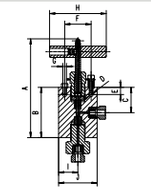	30V4H802-SOG	Vee	1/4	0.062 (1.6)	5.16 (131)	2.62 (66.5)	1.32 (33.5)	0.22 (5.6)	0.37 (9.5)	1.38 (35)	2.95 (75)	1.00 (25.4)	2.01 (51)		1.00 (25.4)	1.02 (25.9)
	30V4H882-SOG	Reg														
	30V6H802-SOG	Vee	3/8	0.062 (1.6)	5.16 (131)	2.62 (66.5)	1.32 (33.5)	0.22 (5.6)	0.37 (9.5)	1.38 (35)	2.95 (75)	1.00 (25.4)	2.01 (51)		1.00 (25.4)	1.02 (25.9)
	30V6H882-SOG	Reg														
	30V9H802-SOG	Vee	9/16	0.078 (2)	5.16 (131)	2.62 (66.5)	1.32 (33.5)	0.22 (5.6)	0.37 (9.5)	1.38 (35)	2.95 (75)	1.32 (33.5)	2.64 (57)		1.00 (25.4)	1.54 (39.1)
	30V9H882-SOG	Reg														

G - Panel mounting screw thread size 10-24 UNC (screw included). All dimensions are for reference only and are subject to change.

All technical and dimensional information subject to change. All general Terms and Conditions of sale, including limitations of our liability, apply to all products and services sold.

High Pressure Fittings for Sour Gas Applications

» Pressures to 30,000 psi (2,070 bar)

Sour Gas Fittings

Maximator Sour Gas Fittings are designed for oil and gas services where H_2S is present. All pressure containing components are made from annealed 316 stainless steel material in compliance with NACE MR0175. All High Pressure fittings are supplied with collars and glands. Mounting holes are standard on all elbows, tees, and crosses.

Tubing Size	Gland	Collar	Plug	Tubing Cap
	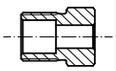		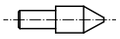	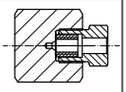
1/4	30G4H-SOG	30C4H-SOG	30P4H-SOG	30TC4H-SOG
3/8	30G6H-SOG	30C6H-SOG	30P6H-SOG	30TC6H-SOG
9/16	30G9H-SOG	30C9H-SOG	30P9H-SOG	30TC9H-SOG

Connection Components

All high pressure fittings are supplied with glands and collars. Refer to the adjacent chart for ordering any of the connection components individually. When using the plug, the collar is not needed.

Fitting Pattern	Catalog Number	Connection Type	O.D. Tube Size in.	Orifice in. (mm)	Dimensions in. (mm) A	B	C	D	E	F	G	Block Thick-ness
Elbow												
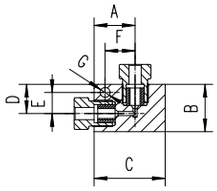	30L4H-SOG	4HF	1/4	0.094 **(2.3)**	0.89 **(22.6)**	1.02 **(25.9)**	1.54 **(39.1)**	0.63 **(16)**	0.46 **(11.7)**	0.65 **(16.5)**	0.22 **(5.6)**	1.02 **(25.9)**
	30L6H-SOG	6HF	3/8	0.125 **(3.2)**	1.26 **(32)**	1.50 **(38.1)**	2.01 **(51)**	0.98 **(24.9)**	0.72 **(18.3)**	0.69 **(17.5)**	0.26 **(6.6)**	1.02 **(25.9)**
	30L9H-SOG	9HF	9/16	0.188 **(4.8)**	1.89 **(48)**	1.89 **(48)**	2.64 **(67)**	1.10 **(28)**	0.83 **(21.1)**	0.94 **(23.9)**	0.33 **(8.4)**	1.54 **(39.1)**
Tee												
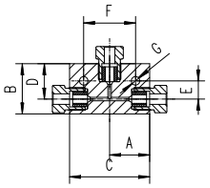	30T4H-SOG	4HF	1/4	0.094 **(2.3)**	1.00 **(25.4)**	1.26 **(32)**	2.01 **(51)**	0.89 **(22.6)**	0.46 **(11.7)**	1.30 **(33)**	0.22 **(5.6)**	1.02 **(25.9)**
	30T6H-SOG	6HF	3/8	0.125 **(3.2)**	1.00 **(25.4)**	1.57 **(39.9)**	2.01 **(51)**	1.06 **(26.9)**	0.72 **(18.3)**	1.38 **(35)**	0.26 **(6.6)**	1.02 **(25.9)**
	30T9H-SOG	9HF	9/16	0.188 **(4.8)**	1.32 **(33.5)**	2.13 **(54.1)**	2.64 **(67)**	1.38 **(35)**	0.83 **(21.1)**	1.89 **(48)**	0.33 **(8.4)**	1.54 **(39.1)**

See page 2 in the Technical Section for pressure/temperature rating chart.
All dimensions are for reference only and are subject to change.

All technical and dimensional information subject to change. All general Terms and Conditions of sale, including limitations of our liability, apply to all products and services sold.

Fitting Pattern	Catalog Number	Connection Type	O.D. Tube Size in.	Orifice in. (mm)	Dimensions in. (mm) A	B	C	D	E	F	G	Block Thick-ness
Cross												
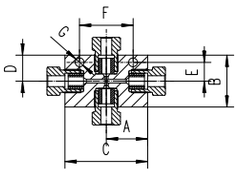	30X4H-SOG	4HF	1/4	0.094 **(2.3)**	1.00 **(25.4)**	1.26 **(32)**	2.01 **(51.1)**	0.63 **(16)**	0.46 **(11.7)**	1.30 **(33)**	0.22 **(5.6)**	1.02 **(25.9)**
	30X6H-SOG	6HF	3/8	0.125 **(3.2)**	1.00 **(25.4)**	2.13 **(54.1)**	2.01 **(51.1)**	1.06 **(27)**	0.72 **(18.3)**	1.38 **(35)**	0.26 **(6.6)**	1.02 **(25.9)**
	30X9H-SOG	9HF	9/16	0.188 **(4.8)**	1.32 **(33.5)**	2.76 **(70.1)**	2.64 **(67)**	1.38 **(35)**	0.83 **(21.1)**	1.89 **(48)**	0.33 **(8.4)**	1.54 **(39.1)**
Straight Coupling / Union Coupling												
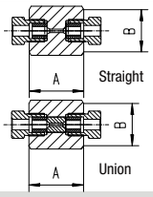	30F4H-SOG	4HF	1/4	0.094 **(2.3)**	1.38 **(35)**	1.06 **(27)**	Straight Coupling					
	30UF4H-SOG						Union Coupling					
	30F6H-SOG	6HF	3/8	0.125 **(3.2)**	1.77 **(45)**	1.06 **(27)**	Straight Coupling					
	30UF6H-SOG						Union Coupling					
	30F9H-SOG	9HF	9/16	0.188 **(4.8)**	2.19 **(55.6)**	1.44 **(36.6)**	Straight Coupling					
	30UF9H-SOG						Union Coupling					
Bulkhead Coupling												
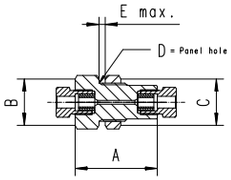	30BF4H-SOG	4HF	1/4	0.094 **(2.3)**	1.89 **(48)**	1.06 **(27)**	1.06 **(27)**	0.94 **(23.9)**	0.16 **(4)**			
	30BF6H-SOG	6HF	3/8	0.125 **(3.2)**	2.38 **(60.5)**	1.44 **(36.5)**	1.44 **(36.5)**	1.12 **(28.5)**	0.35 **(8.9)**			
	30BF9H-SOG	9HF	9/16	0.188 **(4.8)**	2.76 **(70.1)**	1.63 **(41.3)**	1.63 **(41.3)**	1.43 **(36.3)**	0.67 **(17)**			

See page 2 in the Technical Section for pressure/temperature rating chart.
All dimensions are for reference only and are subject to change.

All technical and dimensional information subject to change. All general Terms and Conditions of sale, including limitations of our liability, apply to all products and services sold.

Check Valves for Sour Gas Applications

» Pressures to 30,000 psi (2,070 bar)

O-Ring Check Valves

Maximator o-ring check valves provide high quality directional flow control and bubble tight shut-off for liquids and gases. These check valves are not to be used as a relief device. The opening pressure of the O-Ring Check Valves is approx. 20 psi **(1.5 bar).**

» Materials:

Body, cover, poppet, cover gland: annealed 316 stainless steel
Spring: Inconel X-750
O-ring: FKM "A" [-4°F to 392°F **(-20°C to 200°C)**]

Ball Check Valves

Maximator ball check valves prevent reverse flow where bubble tight shut-off is not mandatory. These check valves are designed to operate to 660°F. These check valves are not to be used as a relief device.The opening pressure of the Ball Check Valves is approx. 20 psi **(1.5 bar)**.

» Materials:

Body, cover, poppet, cover gland: annealed 316 series stainless steel
Ball: annealed 316 series stainless steel
Spring: Inconel X-750

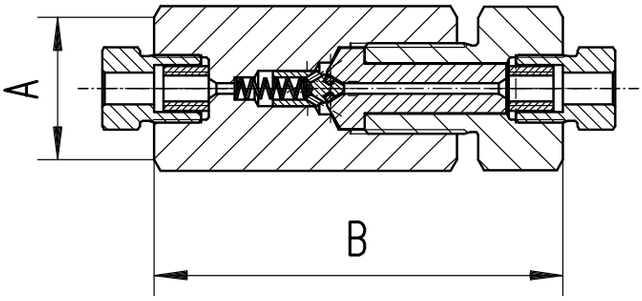

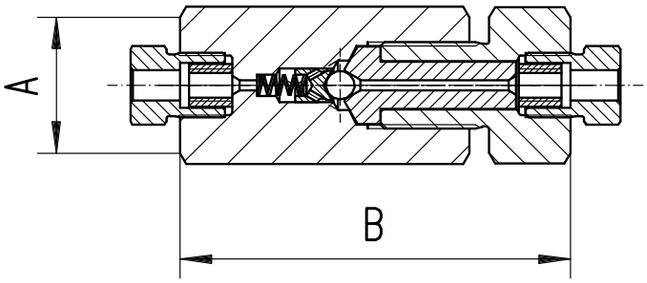

Catalog Number	Connection Type	Pressure Rating psi (bar)	Orifice in. (mm)	Rated (Cv)	Dimensions in. (mm) A (Hex.)	B
O-Ring Check Valves						
300C4H-SOG	4HF	30,000 **(2,070)**	0.094 **(2.3)**	0.15	1.19 **(30.2)**	3.40 **(86.4)**
300C6H-SOG	6HF	30,000 **(2,070)**	0.125 **(3.2)**	0.28	1.19 **(30.2)**	3.81 **(96.8)**
300C9H-SOG	9HF	30,000 **(2,070)**	0.188 **(4.8)**	0.63	1.63 **(41.4)**	4.61 **(117.1)**
Ball Check Valves						
30BC4H-SOG	4HF	30,000 **(2,070)**	0.094 **(2.3)**	0.15	1.19 **(30.2)**	3.40 **(86.4)**
30BC6H-SOG	6HF	30,000 **(2,070)**	0.125 **(3.2)**	0.28	1.19 **(30.2)**	3.81 **(96.8)**
30BC9H-SOG	9HF	30,000 **(2,070)**	0.188 **(4.8)**	0.63	1.63 **(41.4)**	4.61 **(117.1)**

CAUTION: FREQUENT INSPECTIONS of O-Rings are necessary to ensure proper service of the check valve.
O-Rings have shown satisfactory service life in testing, however different service conditions may lead to variations in cycle and shelf life.

All dimensions are for reference only and subject to change.

All technical and dimensional information subject to change. All general Terms and Conditions of sale, including limitations of our liability, apply to all products and services sold.

Dual-Disc Line Filters

Maximator dual-disc line fillters are used to filter process fluids in high pressure systems. This design helps remove the large particles first through a coarse primary disc, which then allows a secondary disc to provide a smaller micron filtration. These filter elements are designed to withstand pressure surges without cracking, flaking, or rupturing. Filter elements come standard in the following micron sizes: 5/8, 8/30, 30/56 (secondary/pr imary). Filters are rated for temperatures -60°F to 660°F **(-50°C to 350°C).** All line filters come with glands and collars.

» Materials:
Body, cover, cover gland: 316 series stainless steel
Element: 316 series stainless steel

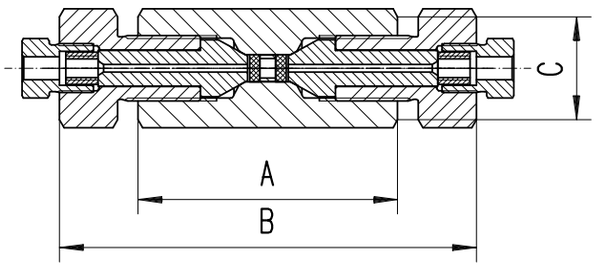

Cup-Type Line Filters

Maximator cup-type line filters are used when maximum filtration surface area and a single micron size element is preferred. This design increases the filter area as much as 6 times the area of the disc type filter, and will permit higher flow rates with a lower pressure drop, and longer intervals between element changes. Filter elements come standard in 5, 30, or 56 micron sizes and are easily replaced. Filters are rated for temperatures -60°F to 660°F **(-50°C to 350°C).** All line filters come with glands and collars.

» Materials:
Body, cover, cover gland: 316 series stainless steel
Element: 316 series stainless steel

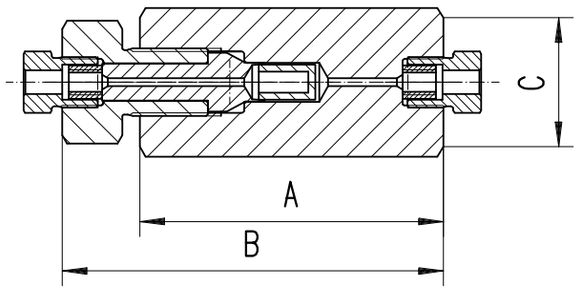

Catalog Number	Pressure Rating psi (bar)	Orifice in. (mm)	Micron Size	Connection Type	Filter Element Area in.² (mm)²	Dimensions in. (mm) A	B	C (Hex.)
Dual-Disc Line Filters								
30DF4H-5/8-SOG	30,000 **(2,070)**	0.094 **(2.3)**	5/8	4HF	0.07 **(50)**	2.99 **(76)**	4.8 **(121,9)**	1.19 **(30.2)**
30DF4H-8/30-SOG			8/30					
30DF4H-30/56-SOG			30/56					
30DF6H-5/8-SOG	30,000 **(2,070)**	0.125 **(3.2)**	5/8	6HF	0.07 **(50)**	2.99 **(76)**	5.29 **(134.4)**	1.19 **(30.2)**
30DF6H-8/30-SOG			8/30					
30DF6H-30/56-SOG			30/56					
30DF9H-5/8-SOG	30,000 **(2,070)**	0.188 **(4.8)**	5/8	9HF	0.15 **(95)**	3.39 **(86.1)**	5.75 **(146)**	1.44 **(36.6)**
30DF9H-8/30-SOG			8/30					
30DF9H-30/56-SOG			30/56					
Cup-Type Line Filters								
30CF4H-5-SOG	30,000 **(2,070)**	0.094 **(2.3)**	5	4HF	0.82 **(530)**	3.39 **(86.1)**	4.25 **(108)**	1.44 **(36.6)**
30CF4H-30-SOG			30					
30CF4H-56-SOG			56					
30CF6H-5-SOG	30,000 **(2,070)**	0.125 **(3.2)**	5	6HF	0.82 **(530)**	3.39 **(86.1)**	4.44 **(112.8)**	1.44 **(36.6)**
30CF6H-30-SOG			30					
30CF6H-56-SOG			56					
30CF9H-5-SOG	30,000 **(2,070)**	0.188 **(4.8)**	5	9HF	0.82 **(530)**	4.06 **(103.1)**	5.28 **(134.1)**	1.63 **(41.3)**
30CF9H-30-SOG			30					
30CF9H-56-SOG			56					

It is recommended that all fluids entering a high pressure system be thoroughly cleaned.
Maximator filters are designed to remove small amounts of process particles. Pressure differential should not exceed 1000 psi across the filter elements.
All dimensions for reference only and are subject to change.

All technical and dimensional information subject to change. All general Terms and Conditions of sale, including limitations of our liability, apply to all products and services sold.

Sour Gas Adapters and Couplings

» Adapters (male to female)

Adapters (male to female)

Maximator sour gas adapters and couplings are designed to join a variety of pressure connections where H_2S ist present. All adapters are made of annealed 316 stainless steel material that meets NACE MR0175 specification.

» Instructions:

Find the male connection you want on the adapter in the **„A“** column and the female connection of the adapter in the **„B“** column. At the intersection of the two columns is the appropriate catalog number.

Tube Size in.	Male Connection A: Connection Type	Male Connection A: Maximum Pressure psi (bar)*	Female Connection B, Female High Pressure / 30,000 pasi (2,070 bar): 1/4” 4H	3/8” 6H	9/16” 9H
Male High					
1/4	4H	30,000 **(2,070)**		30A4H6H-SOG	30A4H9H-SOG
3/8	6H	30,000 **(2,070)**	30A6H4H-SOG		30A6H9H-SOG
9/16	9H	30,000 **(2,070)**	30A9H4H-SOG	30A9H6H-SOG	
Male Pipe					
1/8	NPT	10,000 **(700)**	10A2P4H-SOG	10A2P6H-SOG	10A2P9H-SOG
1/4	NPT	10,000 **(700)**	10A4P4H-SOG	10A4P6H-SOG	10A4P9H-SOG
3/8	NPT	10,000 **(700)**	10A6P4H-SOG	10A6P6H-SOG	10A6P9H-SOG
1/2	NPT	10,000 **(700)**	10A8P4H-SOG	10A8P6H-SOG	10A8P9H-SOG
3/4	NPT	10,000 **(700)**	10A12P4H-SOG	10A12P6H-SOG	10A12P9H-SOG
1	NPT	10,000 **(700)**	10A16P4H-SOG	10A16P6H-SOG	10A16P9H-SOG
Male British Standard Pipe					
1/8	BSP	10,000 **(700)**	10A2B4H-SOG	10A2B6H-SOG	10A2B9H-SOG
1/4	BSP	10,000 **(700)**	10A4B4H-SOG	10A4B6H-SOG	10A4B9H-SOG
3/8	BSP	10,000 **(700)**	10A6B4H-SOG	10A6B6H-SOG	10A6B9H-SOG
1/2	BSP	10,000 **(700)**	10A8B4H-SOG	10A8B6H-SOG	10A8B9H-SOG
3/4	BSP	10,000 **(700)**	10A12B4H-SOG	10A12B6H-SOG	10A12B9H-SOG
1	BSP	10,000 **(700)**	10A16B4H-SOG	10A16B6H-SOG	10A16B9H-SOG

* The pressure rating of any adapter is the value of the lowest rated connection in the fitting.
Note: All Maximator adapters come standard in the “one-piece” design style. Adapters with the two piece design are avaiable by adding a suffix -2P after the part numbers listed above. Both designs are identical in length, and are interchangeable with each other.

All technical and dimensional information subject to change. All general Terms and Conditions of sale, including limitations of our liability, apply to all products and services sold.

Tube Size in.	Male Connection A Connection Type	Maximum Pressure psi (bar)*	Female Connection B Female Pipe / 10,000 psi (700 bar) 1/8" NPT	1/4" NPT	3/8" NPT	1/2" NPT	3/4" NPT	1" NPT
Male High								
1/4	4H	30,000 **(2,070)**	10A4H2P-SOG	10A4H4P-SOG	10A4H6P-SOG	10A4H8P-SOG	10A4H12P-SOG	10A4H16P-SOG
3/8	6H	30,000 **(2,070)**	10A6H2P-SOG	10A6H4P-SOG	10A6H6P-SOG	10A6H8P-SOG	10A6H12P-SOG	10A6H16P-SOG
9/16	9H	30,000 **(2,070)**	10A9H2P-SOG	10A9H4P-SOG	10A9H6P-SOG	10A9H8P-SOG	10A9H12P-SOG	10A9H16P-SOG

Tube Size in.	Male Connection A Connection Type	Maximum Pressure psi (bar)*	Female Connection B Female British Standard Pipe / 10,000 psi (700 bar) 1/8" BSP	1/4" BSP	3/8" BSP	1/2" BSP	3/4" BSP	1" BSP
Male High								
1/4	4H	30,000 **(2,070)**	10A4H2B-SOG	10A4H4B-SOG	10A4H6B-SOG	10A4H8B-SOG	10A4H12B-SOG	10A4H16B-SOG
3/8	6H	30,000 **(2,070)**	10A6H2B-SOG	10A6H4B-SOG	10A6H6B-SOG	10A6H8B-SOG	10A6H12B-SOG	10A6H16B-SOG
9/16	9H	30,000 **(2,070)**	10A6H2B-SOG	10A6H4B-SOG	10A6H6B-SOG	10A6H8B-SOG	10A6H12B-SOG	10A6H16B-SOG

* The pressure rating of any adapter is the value of the lowest rated connection in the fitting.

All technical and dimensional information subject to change. All general Terms and Conditions of sale, including limitations of our liability, apply to all products and services sold.

Sour Gas Adapters and Couplings

» Couplings (female to female)

Couplings (female to female)

Maximator sour gas adapters and couplings are designed to join a variety of pressure connections where H_2S ist present. All adapters are made of annealed 316 stainless steel material that meets NACE MR0175 specification.

Tube Size in.	Female Connection A Connection Type	Maximum Pressure psi (bar)*	Female Connection B Female High Pressure / 30,000 pasi (2,070 bar) 1/4" 4H	3/8" 6H	9/16" 9H
Female High					
1/4	4H	30,000 **(2,070)**	30F4H-SOG	30F4H6H-SOG	30F4H9H-SOG
3/8	6H	30,000 **(2,070)**		30F6H-SOG	30F6H9H-SOG
9/16	9H	30,000 **(2,070)**			30F9H-SOG

Tube Size in.	Female Connection A Connection Type	Maximum Pressure psi (bar)*	Female Connection B Female Pipe / 10,000 psi (700 bar) 1/8" NPT	1/4" NPT	3/8" NPT	1/2" NPT	3/4" NPT	1" NPT
Female High								
1/4	4H	30,000 **(2,070)**	10F4H2P-SOG	10F4H4P-SOG	10F4H6P-SOG	10F4H8P-SOG	10F4H12P-SOG	10F4H16P-SOG
3/8	6H	30,000 **(2,070)**	10F6H2P-SOG	10F6H4P-SOG	10F6H6P-SOG	10F6H8P-SOG	10F6H12P-SOG	10F6H16P-SOG
9/16	9H	30,000 **(2,070)**	10F9H2P-SOG	10F9H4P-SOG	10F9H6P-SOG	10F9H8P-SOG	10F9H12P-SOG	10F9H16P-SOG

Tube Size in.	Female Connection A Connection Type	Maximum Pressure psi (bar)*	Female Connection B Female British Standard Pipe / 10,000 psi (700 bar) 1/8" BSP	1/4" BSP	3/8" BSP	1/2" BSP	3/4" BSP	1" BSP
Female High								
1/4	4H	30,000 **(2,070)**	10F4H2B-SOG	10F4H4B-SOG	10F4H6B-SOG	10F4H8B-SOG	10F4H12B-SOG	10F4H16B-SOG
3/8	6H	30,000 **(2,070)**	10F6H2B-SOG	10F6H4B-SOG	10F6H6B-SOG	10F6H8B-SOG	10F6H12B-SOG	10F6H16B-SOG
9/16	9H	30,000 **(2,070)**	10F9H2B-SOG	10F9H4B-SOG	10F9H6B-SOG	10F9H8B-SOG	10F9H12B-SOG	10F9H16B-SOG

* The pressure rating of any adapter is the value of the lowest rated connection in the fitting.

All technical and dimensional information subject to change. All general Terms and Conditions of sale, including limitations of our liability, apply to all products and services sold.

Adapters (male to male)

Maximator male to male adapters allow the joinng of two different sizes and / or type of tube or pipe female connections.

Male Connection A			Male Connection B Male High Pressure / 30,000 pasi (2,070 bar)		
Tube Size in.	Connection Type	Maximum Pressure psi (bar)*	1/4" 4H	3/8" 6H	9/16" 9H
Female High					
1/4	4H	30,000 **(2,070)**	30M4H-SOG	30M4H6H-SOG	30M4H9H-SOG
3/8	6H	30,000 **(2,070)**		30M6H-SOG	30M6H9H-SOG
9/16	9H	30,000 **(2,070)**			30M9H-SOG

Male Connection A			Male Connection B Male Pipe / 10,000 psi (700 bar)					
Tube Size in.	Connection Type	Maximum Pressure psi (bar)*	1/8" NPT	1/4" NPT	3/8" NPT	1/2" NPT	3/4" NPT	1" NPT
Female High								
1/4	4H	30,000 **(2,070)**	10M4H2P-SOG	10M4H4P-SOG	10M4H6P-SOG	10M4H8P-SOG	10M4H12P-SOG	10M4H16P-SOG
3/8	6H	30,000 **(2,070)**	10M6H2P-SOG	10M6H4P-SOG	10M6H6P-SOG	10M6H8P-SOG	10M6H12P-SOG	10M6H16P-SOG
9/16	9H	30,000 **(2,070)**	10M9H2P-SOG	10M9H4P-SOG	10M9H6P-SOG	10M9H8P-SOG	10M9H12P-SOG	10M9H16P-SOG

Male Connection A			Male Connection B Male British Standard Pipe / 10,000 psi (700 bar)					
Tube Size in.	Connection Type	Maximum Pressure psi (bar)*	1/8" BSP	1/4" BSP	3/8" BSP	1/2" BSP	3/4" BSP	1" BSP
Female High								
1/4	4H	30,000 **(2,070)**	10M4H2B-SOG	10M4H4B-SOG	10M4H6B-SOG	10M4H8B-SOG	10M4H12B-SOG	10M4H16B-SOG
3/8	6H	30,000 **(2,070)**	10M6H2B-SOG	10M6H4B-SOG	10M6H6B-SOG	10M6H8B-SOG	10M6H12B-SOG	10M6H16B-SOG
9/16	9H	30,000 **(2,070)**	10M9H2B-SOG	10M9H4B-SOG	10M9H6B-SOG	10M9H8B-SOG	10M9H12B-SOG	10M9H16B-SOG

* The pressure rating of any adapter is the value of the lowest rated connection in the fitting.

All technical and dimensional information subject to change. All general Terms and Conditions of sale, including limitations of our liability, apply to all products and services sold.

High Pressure Tubing for Sour Gas Applications

» Pressures to 30,000 psi (2,070 bar)

Sour Gas Tubing

Maximator Sour Gas Tubing is designed for oil and gas services where H_2S is present. All tubing is seamless annealed 316 stainless steel material in compliance with NACE MR0175. This tubing is made under strict manufacturing and quality control standards and inspections, with dimensional tolerances to match the requirements of the high pressure coned and threaded connections.

Tubing Tolerances

Normal Tubing Size in. (mm)	Tolerance O.D in. (mm)
1/4 **(6.35)**	0.248 / 0.243 **(6.299 / 6.172)**
3/8 **(9.53)**	0.370 / 0.365 **(9.398 / 9.271)**
9/16 **(14.29)**	0.557 / 0.552 **(14.147 / 14.021)**

Catalog Number	Tube Material	Fits Connection Type	Tube Size in. (mm)		Working Pressure psi (bar)				
			O.D.	I.D.	-325°F to 100°F (-198°C to 37°C)	200°F (93°C)	400°F (204°C)	600°F (315°C)	800°F (426°C)
30TU4H-316-SOG	316SS	4HF	1/4 **(6.35)**	0.083 **(2.11)**	30,000 **(2,070)**	27,000 **(1,850)**	24,900 **(1,700)**	22,800 **(1,600)**	21,600 **(1,500)**
30TU6H-316-SOG	316SS	6HF	3/8 **(9.53)**	0.125 **(3.20)**	30,000 **(2,070)**	27,000 **(1,850)**	24,900 **(1,700)**	22,800 **(1,600)**	21,600 **(1,500)**
30TU9H-316-SOG	316SS	9HF	9/16 **(14.29)**	0.188 **(4.77)**	30,000 **(2,070)**	27,000 **(1,850)**	24,900 **(1,700)**	22,800 **(1,600)**	21,600 **(1,500)**

All dimensions for reference only and are subject of change.

All technical and dimensional information subject to change. All general Terms and Conditions of sale, including limitations of our liability, apply to all products and services sold.

Coned and threaded nipples

Maximator offers a line of coned and threaded ultra high pressure tube nipples in a variety of lengths for all standard tube sizes.

The coned and threaded ultra high pressure tube nipples are available in 316 stainless steel. See chart below for ordering information.

Special length coned and threaded nipples are available upon request. Consult Maximator for availability and price.

Catalog Numbers are 316 Stainless Steel material Length in. (mm)							Fits Con-nection Type	Tube Size in. (mm)		Working Pressure at 100°F psi (mm)
2.75" (69.85)	3" (76.2)	4" (101.6)	6" (152.4)	8" (203.2)	10" (254)	12" (304.8)		O.D.	I.D.	
30N4H-2.75-316-SOG	30N4H-3-316-SOG	30N4H-4-316-SOG	30N4H-6-316-SOG	30N4H-8-316-SOG	30N4H-10-316-SOG	30N4H-12-316-SOG	4HF	1/4	0.083 (**2.11**)	30,000 **(2,070)**
	30N6H-3-316-SOG	30N6H-4-316-SOG	30N6H-6-316-SOG	30N6H-8-316-SOG	30N6H-10-316-SOG	30N6H-12-316-SOG	6HF	3/8	0.125 **(3.17)**	30,000 **(2,070)**
		30N9H-4-316-SOG	30N9H-6-316-SOG	30N9H-8-316-SOG	30N9H-10-316-SOG	30N9H-12-316-SOG	9HF	9/16	0.188 **(4.77)**	30,000 **(2,070)**

Standard nipples are not supplied with glands and collars, see Fittings on page 6 for these components.
See adjacent Tubing page 14, for pressure/temperature rating chart.

All dimensions are for reference only and subject to change.

All technical and dimensional information subject to change. All general Terms and Conditions of sale, including limitations of our liability, apply to all products and services sold.

Adapters and Couplings

» Pressures to 152,000 psi (10,500 bar)

MAXIMATOR designs and manufactures a wide variety of adapters and couplings in an array of styles and sizes. The adapters in this section are considered standard and readily available. Other materials and configurations are available upon request.

Adapters, Couplings & Accessories feature:

- Adapters & Couplings are 316 cold worked stainless steel material.
- Traceability is ensured by component laser etching, and through extensive documentation which includes: part number, pressure, material batch numbers, and connection type.
- Adapters are available in one or two-piece designs.
- Safety weep holes come standard on all pressure connections.
- All medium, high and ultra high pressure Adapters and Couplings come complete with glands and collars.

MAXIMATOR offers a complete line of standard high pressure adapters and couplings to compliment our valve line. Special design adapters and materials are available upon request.

Note: When selecting multiple items, the pressure rating would be that of the lowest rated component.

Adapters, Couplings & Accessories Index	Page:
Adapters (male to female)	2 – 5
Couplings (female to female)	6 – 7
Adapters (male to male)	8 – 9

MAXIMATOR GmbH, Lange Straße 6, 99734 Nordhausen, Telefon +49 (0) 3631 9533 – 0, Telefax + 49 (0) 3631 9533 – 5010, www.maximator.de, info@maximator.de

All technical and dimensional information subject to change. All general Terms and Conditions of sale, including limitations of our liability, apply to all products and services sold.

Adapters and Couplings

» Adapters (male to female)

Adapters (male to female)

Maximator male to female adapters allow the joining of male to female connections. The two connections can be a variety of tube or pipe connection types, with different size combinations possible.

All adapters are made of 316 cold worked stainless steel material; other materials are available upon request. Glands and collars are included with each female tube connection.

Tube Size in.	Male Connection A Connection Type	Maximum Pressure psi (bar)*	Female Connection B Female Medium Pressure / 22,500 psi (1,550 bar) 1/4" 4M	3/8" 6M	9/16" 9M	3/4" 12M	1" 16M
Male Medium							
1/4"	4M	22,500 **(1,550)**		21A4M6M	21A4M9M	21A4M12M	21A4M16M
3/8"	6M	22,500 **(1,550)**	21A6M4M		21A6M9M	21A6M12M	21A6M16M
9/16"	9M	22,500 **(1,550)**	21A9M4M	21A9M6M		21A9M12M	21A9M16M
3/4"	12M	22,500 **(1,550)**	21A12M4M	21A12M6M	21A12M9M		21A12M16M
1"	16M	22,500 **(1,550)**	21A16M4M	21A16M6M	21A16M9M	21A16M12M	
Male High							
1/4"	4H	65,000 **(4,500)**	21A4H4M	21A4H6M	21A4H9M	21A4H12M	21A4H16M
3/8"	6H	65,000 **(4,500)**	21A6H4M	21A6H6M	21A6H9M	21A6H12M	21A6H16M
9/16"	9H	65,000 **(4,500)**	21A9H4M	21A9H6M	21A9H9M	21A9H12M	21A9H16M
Male Ultra High							
5/16"	5U	152,000 **(10,500)**	21A5U4M	21A5U6M	21A5U9M	21A5U12M	21A5U16M
Male Pipe							
1/8"	NPT	15,200 **(1,050)**	15A2P4M	15A2P6M	15A2P9M	15A2P12M	15A2P16M
1/4"	NPT	15,200 **(1,050)**	15A4P4M	15A4P6M	15A4P9M	15A4P12M	15A4P16M
3/8"	NPT	15,200 **(1,050)**	15A6P4M	15A6P6M	15A6P9M	15A6P12M	15A6P16M
1/2"	NPT	15,200 **(1,050)**	15A8P4M	15A8P6M	15A8P9M	15A8P12M	15A8P16M
3/4"	NPT	15,200 **(1,050)**	15A12P4M	15A12P6M	15A12P9M	15A12P12M	15A12P16M
1"	NPT	15,200 **(1,050)**	15A16P4M	15A16P6M	15A16P9M	15A16P12M	15A16P16M
Male British Standard Pipe							
1/8"	BSP	15,200 **(1,050)**	15A2B4M	15A2B6M	15A2B9M	15A2B12M	15A2B16M
1/4"	BSP	15,200 **(1,050)**	15A4B4M	15A4B6M	15A4B9M	15A4B12M	15A4B16M
3/8"	BSP	15,200 **(1,050)**	15A6B4M	15A6B6M	15A6B9M	15A6B12M	15A6B16M
1/2"	BSP	15,200 **(1,050)**	15A8B4M	15A8B6M	15A8B9M	15A8B12M	15A8B16M
3/4"	BSP	15,200 **(1,050)**	15A12B4M	15A12B6M	15A12B9M	15A12B12M	15A12B16M
1"	BSP	15,200 **(1,050)**	15A16B4M	15A16B6M	15A16B9M	15A16B12M	15A16B16M

* The pressure rating of any adapter is the value of the lowest rated connection in the fitting.
Note: All Maximator adapters come standard in the "one-piece" design style. Adapters with the two piece design are avaiable by adding a suffix -2P after the part numbers listed above. Both designs are identical in length, and are interchangeable with each other.

All technical and dimensional information subject to change. All general Terms and Conditions of sale, including limitations of our liability, apply to all products and services sold.

Instructions:
Find the male connection you want on the adapter in the **„A“** column and the female connection of the adapter in the **„B“** column. At the intersection of the two columns is the appropriate catalog number.

A .... B

Male Connection A			Female Connection B			
Tube Size in.	Connection Type	Maximum Pressure psi (bar)*	Female High Pressure 65,000 psi (4,500 bar) 1/4” 4H	3/8” 6H	9/16” 9H	Female Ultra-High Pressure 152,000 psi (10,500 bar) 5/16” 5U
Male Medium						
1/4”	4M	22,500 **(1,550)**	21A4M4H	21A4M6H	21A4M9H	21A4M5U
3/8”	6M	22,500 **(1,550)**	21A6M4H	21A6M6H	21A6M9H	21A6M5U
9/16”	9M	22,500 **(1,550)**	21A9M4H	21A9M6H	21A9M9H	21A9M5U
3/4”	12M	22,500 **(1,550)**	21A12M4H	21A12M6H	21A12M9H	21A12M5U
1”	16M	22,500 **(1,550)**	21A16M4H	21A16M6H	21A16M9H	21A16M5U
Male High						
1/4”	4H	65,000 **(4,500)**		65A4H6H	65A4H9H	65A4H5U
3/8”	6H	65,000 **(4,500)**	65A6H4H		65A6H9H	65A6H5U
9/16”	9H	65,000 **(4,500)**	65A9H4H	65A9H6H		65A9H5U
Male Ultra High						
5/16”	5U	152,000 **(10,500)**	65A5U4H	65A5U6H	65A5U9H	
Male Pipe						
1/8”	NPT	15,200 **(1,050)**	15A2P4H	15A2P6H	15A2P9H	15A2P5U
1/4”	NPT	15,200 **(1,050)**	15A4P4H	15A4P6H	15A4P9H	15A4P5U
3/8”	NPT	15,200 **(1,050)**	15A6P4H	15A6P6H	15A6P9H	15A6P5U
1/2”	NPT	15,200 **(1,050)**	15A8P4H	15A8P6H	15A8P9H	15A8P5U
3/4”	NPT	15,200 **(1,050)**	15A12P4H	15A12P6H	15A12P9H	15A12P5U
1”	NPT	15,200 **(1,050)**	15A16P4H	15A16P6H	15A16P9H	15A16P5U
Male British Standard Pipe						
1/8”	BSP	15,200 **(1,050)**	15A2B4H	15A2B6H	15A2B9H	15A2B5U
1/4”	BSP	15,200 **(1,050)**	15A4B4H	15A4B6H	15A4B9H	15A4B5U
3/8”	BSP	15,200 **(1,050)**	15A6B4H	15A6B6H	15A6B9H	15A6B5U
1/2”	BSP	15,200 **(1,050)**	15A8B4H	15A8B6H	15A8B9H	15A8B5U
3/4”	BSP	15,200 **(1,050)**	15A12B4H	15A12B6H	15A12B9H	15A12B5U
1”	BSP	15,200 **(1,050)**	15A16B4H	15A16B6H	15A16B9H	15A16B5U

* The pressure rating of any adapter is the value of the lowest rated connection in the fitting.

All technical and dimensional information subject to change. All general Terms and Conditions of sale, including limitations of our liability, apply to all products and services sold.

Adapters and Couplings

» Adapters (male to female)

Adapters (male to female)

Maximator male to female adapters allow the joining of male to female connections. The two connections can be a variety of tube or pipe connection types, with different size combinations possible.

All adapters are made of 316 cold worked stainless steel material; other materials are available upon request. Glands and collars are included with each female tube connection.

Tube Size in.	Male Connection A Connection Type	Maximum Pressure psi (bar)*	Female Connection B Female Pipe / 15,200 psi (1,050 bar) 1/8" NPT	1/4" NPT	3/8" NPT	1/2" NPT	3/4" NPT	1" NPT
Male Medium								
1/4"	4M	22,500 **(1,550)**	15A4M2P	15A4M4P	15A4M6P	15A4M8P	15A4M12P	15A4M16P
3/8"	6M	22,500 **(1,550)**	15A6M2P	15A6M4P	15A6M6P	15A6M8P	15A6M12P	15A6M16P
9/16"	9M	22,500 **(1,550)**	15A9M2P	15A9M4P	15A9M6P	15A9M8P	15A9M12P	15A9M16P
3/4"	12M	22,500 **(1,550)**	15A12M2P	15A12M4P	15A12M6P	15A12M8P	15A12M12P	15A12M16P
1"	16M	22,500 **(1,550)**	15A16M2P	15A16M4P	15A16M6P	15A16M8P	15A16M12P	15A16M16P
Male High								
1/4"	4H	65,000 **(4,500)**	15A4H2P	15A4H4P	15A4H6P	15A4H8P	15A4H12P	15A4H16P
3/8"	6H	65,000 **(4,500)**	15A6H2P	15A6H4P	15A6H6P	15A6H8P	15A6H12P	15A6H16P
9/16"	9H	65,000 **(4,500)**	15A9H2P	15A9H4P	15A9H6P	15A9H8P	15A9H12P	15A9H16P
Male Ultra High								
5/16"	5U	152,000 **(10,500)**	15A5U2P	15A5U4P	15A5U6P	15A5U8P	15A5U12P	15A5U16P
Male Pipe								
1/8"	NPT	15,200 **(1,050)**		15A2P4P	15A2P6P	15A2P8P	15A2P12P	15A2P16P
1/4"	NPT	15,200 **(1,050)**	5A4P2P		15A4P6P	15A4P8P	15A4P12P	15A4P16P
3/8"	NPT	15,200 **(1,050)**	15A6P2P	15A6P4P		15A6P8P	15A6P12P	15A6P16P
1/2"	NPT	15,200 **(1,050)**	15A8P2P	15A8P4P	15A8P6P		15A8P12P	15A8P16P
3/4"	NPT	15,200 **(1,050)**	15A12P2P	15A12P4P	15A12P6P	15A12P8P		15A12P16P
1"	NPT	15,200 **(1,050)**	15A16P2P	15A16P4P	15A16P6P	15A16P8P	15A16P12P	
Male British Standard Pipe								
1/8"	BSP	15,200 **(1,050)**	15A2B2P	15A2B4P	15A2B6P	15A2B8P	15A2B12P	15A2B16P
1/4"	BSP	15,200 **(1,050)**	15A4B2P	15A4B4P	15A4B6P	15A4B8P	15A4B12P	15A4B16P
3/8"	BSP	15,200 **(1,050)**	15A6B2P	15A6B4P	15A6B6P	15A6B8P	15A6B12P	15A6B16P
1/2"	BSP	15,200 **(1,050)**	15A8B2P	15A8B4P	15A8B6P	15A8B8P	15A8B12P	15A8B16P
3/4"	BSP	15,200 **(1,050)**	15A12B2P	15A12B4P	15A12B6P	15A12B8P	15A12B12P	15A12B16P
1"	BSP	15,200 **(1,050)**	15A16B2P	15A16B4P	15A16B6P	15A16B8P	15A16B12P	15A16B16P

* The pressure rating of any adapter is the value of the lowest rated connection in the fitting.
Note: All Maximator adapters come standard in the "one-piece" design style. Adapters with the two piece design are avaiable by adding a suffix -2P after the part numbers listed above. Both designs are identical in length, and are interchangeable with each other.

All technical and dimensional information subject to change. All general Terms and Conditions of sale, including limitations of our liability, apply to all products and services sold.

Tube Size in.	Male Connection A Connection Type	Maximum Pressure psi (bar)*	Female Connection B Female British Standard Pipe / 15,200 psi (1,050 bar) 1/8" BSP	1/4" BSP	3/8" BSP	1/2" BSP	3/4" BSP	1" BSP
Male Medium								
1/4"	4M	22,500 **(1,550)**	15A4M2B	15A4M4B	15A4M6B	15A4M8B	15A4M12B	15A4M16B
3/8"	6M	22,500 **(1,550)**	15A6M2B	15A6M4B	15A6M6B	15A6M8B	15A6M12B	15A6M16B
9/16"	9M	22,500 **(1,550)**	15A9M2B	15A9M4B	15A9M6B	15A9M8B	15A9M12B	15A9M16B
3/4"	12M	22,500 **(1,550)**	15A12M2B	15A12M4B	15A12M6B	15A12M8B	15A12M12B	15A12M16B
1"	16M	22,500 **(1,550)**	15A16M2B	15A16M4B	15A16M6B	15A16M8B	15A16M12B	15A16M16B
Male High								
1/4"	4H	65,000 **(4,500)**	15A4H2B	15A4H4B	15A4H6B	15A4H8B	15A4H12B	15A4H16B
3/8"	6H	65,000 **(4,500)**	15A6H2B	15A6H4B	15A6H6B	15A6H8B	15A6H12B	15A6H16B
9/16"	9H	65,000 **(4,500)**	15A9H2B	15A9H4B	15A9H6B	15A9H8B	15A9H12B	15A9H16B
Male Ultra High								
5/16"	5U	152,000 **(10,500)**	15A5U2B	15A5U4B	15A5U6B	15A5U8B	15A5U12B	15A5U16B
Male Pipe								
1/8"	NPT	15,200 **(1,050)**	15A2P2B	15A2P4B	15A2P6B	15A2P8BP	15A2P12B	15A2P16B
1/4"	NPT	15,200 **(1,050)**	15A4P2B	15A4P4B	15A4P6B	15A4P8B	15A4P12B	15A4P16B
3/8"	NPT	15,200 **(1,050)**	15A6P2B	15A6P4B	15A6P6B	15A6P8B	15A6P12B	15A6P16B
1/2"	NPT	15,200 **(1,050)**	15A8P2B	15A8P4B	15A8P6B	15A8P8B	15A8P12B	15A8P16B
3/4"	NPT	15,200 **(1,050)**	15A12P2B	15A12P4B	15A12P6B	15A12P8B	15A12P12B	15A12P16B
1"	NPT	15,200 **(1,050)**	15A16P2B	15A16P4B	15A16P6B	15A16P8B	15A16P12B	15A16P16B
Male British Standard Pipe								
1/8"	BSP	15,200 **(1,050)**		15A2B4B	15A2B6B	15A2B8B	15A2B12B	15A2B16B
1/4"	BSP	15,200 **(1,050)**	15A4B2B		15A4B6B	15A4B8B	15A4B12B	15A4B16B
3/8"	BSP	15,200 **(1,050)**	15A6B2B	15A6B4B		15A6B8B	15A6B12B	15A6B16B
1/2"	BSP	15,200 **(1,050)**	15A8B2B	15A8B4B	15A8B6B		15A8B12B	15A8B16B
3/4"	BSP	15,200 **(1,050)**	15A12B2B	15A12B4B	15A12B6B	15A12B8B		15A12B16B
1"	BSP	15,200 **(1,050)**	15A16B2B	15A16B4B	15A16B6B	15A16B8B	15A16B12B	

* The pressure rating of any adapter is the value of the lowest rated connection in the fitting.

All technical and dimensional information subject to change. All general Terms and Conditions of sale, including limitations of our liability, apply to all products and services sold.

Adapters and Couplings
» Couplings (female to female)

Couplings (female to female)

Maximator couplings are female to female fittings that allow the joining of two different sizes and / or types of connections for a variety of size combinations. All couplings and adapters are made of 316 cold worked stainless steel material; other materials are available upon request. Glands and collars are included with each female tube connection.

» Instructions:
Find the male connection you want on the adapter in the **„A“** column and the female connection of the adapter in the **„B“** column. At the intersection of the two columns is the appropriate catalog number.

A .... B

Female Connection A			Female Connection B Female Medium Pressure / 22,500 psi (1,550 bar)				
Tube Size in.	Connection Type	Maximum Pressure psi (bar)*	1/4” 4M	3/8” 6M	9/16” 9M	3/4” 12M	1” 16M
Female Medium							
1/4”	4M	22,500 **(1,550)**	21F4M	21F4M6M	21F4M9M	21F4M12M	21F4M16M
3/8”	6M	22,500 **(1,550)**		21F6M	21F6M9M	21F6M12M	21F6M16M
9/16”	9M	22,500 **(1,550)**			21F9M	21F9M12M	21F9M16M
3/4”	12M	22,500 **(1,550)**				21F12M	21F12M16M
1”	16M	22,500 **(1,550)**					21F16M

Female Connection A			Female Connection B Female High Pressure 65,000 psi (4,500 bar)			Female Ultra-High Pressure 152,000 psi (10,500 bar)
Tube Size in.	Connection Type	Maximum Pressure psi (bar)*	1/4” 4H	3/8” 6H	9/16” 9H	5/16” 5U
Female Medium						
1/4”	4M	22,500 **(1,550)**	21F4M4H	21F4M6H	21F4M9H	21F4M5U
3/8”	6M	22,500 **(1,550)**	21F6M4H	21F6M6H	21F6M9H	21F6M5U
9/16”	9M	22,500 **(1,550)**	21F9M4H	21F9M6H	21F9M9H	21F9M5U
3/4”	12M	22,500 **(1,550)**	21F12M4H	21F12M6H	21F12M9H	21F12M5U
1”	16M	22,500 **(1,550)**	21F16M4H	21F16M6H	21F16M9H	21F16M5U
Female High						
1/4”	4H	65,000 **(4,500)**	65F4H	65F4H6H	65F4H9H	65F4H5U
3/8”	6H	65,000 **(4,500)**		65F6H	65F6H9H	65F6H5U
9/16”	9H	65,000 **(4,500)**			65F9H	65F9H5U
Female Ultra High						
5/16”	5U	152,000 **(10,500)**				152F5U

* The pressure rating of any adapter is the value of the lowest rated connection in the fitting.
Note: All Maximator adapters come standard in the “one-piece” design style. Adapters with the two piece design are avaiable by adding a suffix -2P after the part numbers listed above. Both designs are identical in length, and are interchangeable with each other.

All technical and dimensional information subject to change. All general Terms and Conditions of sale, including limitations of our liability, apply to all products and services sold.

Female Connection A			Female Connection B Female Pipe / 15,200 psi (1,050 bar)					
Tube Size in.	Connection Type	Maximum Pressure psi (bar)*	1/8" NPT	1/4" NPT	3/8" NPT	1/2 " NPT	3/4" NPT	1" NPT
Female Medium								
1/4"	4M	22,500 **(1,550)**	15F4M2P	15F4M4P	15F4M6P	15F4M8P	15F4M12P	15F4M16P
3/8"	6M	22,500 **(1,550)**	15F6M2P	15F6M4P	15F6M6P	15F6M8P	15F6M12P	15F6M16P
9/16"	9M	22,500 **(1,550)**	15F9M2P	15F9M4P	15F9M6P	15F9M8P	15F9M12P	15F9M16P
3/4"	12M	22,500 **(1,550)**	15F12M2P	15F12M4P	15F12M6P	15F12M8P	15F12M12P	15F12M16P
1"	16M	22,500 **(1,550)**	15F16M2P	15F16M4P	15F16M6P	15F16M8P	15F16M12P	15F16M16P
Female High								
1/4"	4H	65,000 **(4,500)**	15F4H2P	15F4H4P	15F4H6P	15F4H8P	15F4H12P	15F4H16P
3/8"	6H	65,000 **(4,500)**	15F6H2P	15F6H4P	15F6H6P	15F6H8P	15F6H12P	15F6H16P
9/16"	9H	65,000 **(4,500)**	15F9H2P	15F9H4P	15F9H6P	15F9H8P	15F9H12P	15F9H16P
Female Ultra High								
5/16"	5U	152,000 **(10,500)**	15F5U2P	15F5U4P	15F5U6P	15F5U8P	15F5U12P	15F5U16P

Female Connection A			Female Connection B Female British Standard Pipe / 15,200 psi (1,050 bar)					
Tube Size in.	Connection Type	Maximum Pressure psi (bar)*	1/8" BSP	1/4" BSP	3/8" BSP	1/2 " BSP	3/4" BSP	1" BSP
Female Medium								
1/4"	4M	22,500 **(1,550)**	15F4M2B	15F4M4B	15F4M6B	15F4M8B	15F4M12B	15F4M16B
3/8"	6M	22,500 **(1,550)**	15F6M2B	15F6M4B	15F6M6B	15F6M8B	15F6M12B	15F6M16B
9/16"	9M	22,500 **(1,550)**	15F9M2B	15F9M4B	15F9M6B	15F9M8B	15F9M12B	15F9M16B
3/4"	12M	22,500 **(1,550)**	15F12M2B	15F12M4B	15F12M6B	15F12M8B	15F12M12B	15F12M16B
1"	16M	22,500 **(1,550)**	15F16M2B	15F16M4B	15F16M6B	15F16M8B	15F16M12B	15F16M16B
Female High								
1/4"	4H	65,000 **(4,500)**	15F4H2B	15F4H4B	15F4H6B	15F4H8B	15F4H12B	15F4H16B
3/8"	6H	65,000 **(4,500)**	15F6H2B	15F6H4B	15F6H6B	15F6H8B	15F6H12B	15F6H16B
9/16"	9H	65,000 **(4,500)**	15F9H2B	15F9H4B	15F9H6B	15F9H8B	15F9H12B	15F9H16B
Female Ultra High								
5/16"	5U	152,000 **(10,500)**	15F5U2B	15F5U4B	15F5U6B	15F5U8B	15F5U12B	15F5U16B

* The pressure rating of any adapter is the value of the lowest rated connection in the fitting.

All technical and dimensional information subject to change. All general Terms and Conditions of sale, including limitations of our liability, apply to all products and services sold.

Adapters and Couplings
» Adapters (male to male)

Adapters (male to male)

MAXIMATOR male to male adapters allow the joining of two different sizes and / or type of tube or pipe female connections.

» Instructions:
Find the male connection you want on the adapter in the **„A“** column and the female connection of the adapter in the **„B“** column. At the intersection of the two columns is the appropriate catalog number.

Male Connection A			Male Connection B Male Medium Pressure / 22,500 psi (1,550 bar)				
Tube Size in.	Connection Type	Maximum Pressure psi (bar)*	1/4” 4M	3/8” 6M	9/16” 9M	3/4” 12M	1” 16M
Male Medium							
1/4”	4M	22,500 **(1,550)**	21M4M	21M4M6M	21M4M9M	21M4M12M	21M4M16M
3/8”	6M	22,500 **(1,550)**		21M6M	21M6M9M	21M6M12M	21M6M16M
9/16”	9M	22,500 **(1,550)**			21M9M	21M9M12M	21M9M16M
3/4”	12M	22,500 **(1,550)**				21M12M	21M12M16M
1”	16M	22,500 **(1,550)**					21M16M

Male Connection A			Male Connection B Male High Pressure 65,000 psi (4,500 bar)			Male Ultra-High Pressure 152,000 psi (10,500 bar)
Tube Size in.	Connection Type	Maximum Pressure psi (bar)*	1/4” 4H	3/8” 6H	9/16” 9H	5/16” 5U
Male Medium						
1/4”	4M	22,500 **(1,550)**	21M4M4H	21M4M6H	21M4M9H	21M4M5U
3/8”	6M	22,500 **(1,550)**	21M6M4H	21M6M6H	21M6M9H	21M6M5U
9/16”	9M	22,500 **(1,550)**	21M9M4H	21M9M6H	21M9M9H	21M9M5U
3/4”	12M	22,500 **(1,550)**	21M12M4H	21M12M6H	21M12M9H	21M12M5U
1”	16M	22,500 **(1,550)**	21M16M4H	21M16M6H	21M16M9H	21M16M5U
Male High						
1/4”	4H	65,000 **(4,500)**	65M4H	65M4H6H	65M4H9H	65M4H5U
3/8”	6H	65,000 **(4,500)**		65M6H	65M6H9H	65M6H5U
9/16”	9H	65,000 **(4,500)**			65M9H	65M9H5U
Male Ultra High						
5/16”	5U	152,000 **(10,500)**				152M5U

* The pressure rating of any adapter is the value of the lowest rated connection in the fitting.
Note: All Maximator adapters come standard in the “one-piece” design style. Adapters with the two piece design are avaiable by adding a suffix -2P after the part numbers listed above. Both designs are identical in length, and are interchangeable with each other.

All technical and dimensional information subject to change. All general Terms and Conditions of sale, including limitations of our liability, apply to all products and services sold.

Male Connection A			Male Connection B Male Pipe / 15,200 psi (1,050 bar)					
Tube Size in.	Connection Type	Maximum Pressure psi (bar)*	1/8" NPT	1/4" NPT	3/8" NPT	1/2 " NPT	3/4" NPT	1" NPT
Male Medium								
1/4"	4M	22,500 **(1,550)**	15M4M2P	15M4M4P	15M4M6P	15M4M8P	15M4M12P	15M4M16P
3/8"	6M	22,500 **(1,550)**	15M6M2P	15M6M4P	15M6M6P	15M6M8P	15M6M12P	15M6M16P
9/16"	9M	22,500 **(1,550)**	15M9M2P	15M9M4P	15M9M6P	15M9M8P	15M9M12P	15M9M16P
3/4"	12M	22,500 **(1,550)**	15M12M2P	15M12M4P	15M12M6P	15M12M8P	15M12M12P	15M12M16P
1"	16M	22,500 **(1,550)**	15M16M2P	15M16M4P	15M16M6P	15M16M8P	15M16M12P	15M16M16P
Male High								
1/4"	4H	65,000 **(4,500)**	15M4H2P	15M4H4P	15M4H6P	15M4H8P	15M4H12P	15M4H16P
3/8"	6H	65,000 **(4,500)**	15M6H2P	15M6H4P	15M6H6P	15M6H8P	15M6H12P	15M6H16P
9/16"	9H	65,000 **(4,500)**	15M9H2P	15M9H4P	15M9H6P	15M9H8P	15M9H12P	15M9H16P
Male Ultra High								
5/16"	5U	152,000 **(10,500)**	15M5U2P	15M5U4P	15M5U6P	15M5U8P	15M5U12P	15M5U16P

Male Connection A			Male Connection B Male British Standard Pipe / 15,200 psi (1,050 bar)					
Tube Size in.	Connection Type	Maximum Pressure psi (bar)*	1/8" BSP	1/4" BSP	3/8" BSP	1/2 " BSP	3/4" BSP	1"BSP
Male Medium								
1/4"	4M	22,500 **(1,550)**	15M4M2B	15M4M4B	15M4M6B	15M4M8B	15M4M12B	15M4M16B
3/8"	6M	22,500 **(1,550)**	15M6M2B	15M6M4B	15M6M6B	15M6M8B	15M6M12B	15M6M16B
9/16"	9M	22,500 **(1,550)**	15M9M2B	15M9M4B	15M9M6B	15M9M8B	15M9M12B	15M9M16B
3/4"	12M	22,500 **(1,550)**	15M12M2B	15M12M4B	15M12M6B	15M12M8B	15M12M12B	15M12M16B
1"	16M	22,500 **(1,550)**	15M16M2B	15M16M4B	15M16M6B	15M16M8B	15M16M12B	15M16M16B
Male High								
1/4"	4H	65,000 **(4,500)**	15M4H2B	15M4H4B	15M4H6B	15M4H8B	15M4H12B	15M4H16B
3/8"	6H	65,000 **(4,500)**	15M6H2B	15M6H4B	15M6H6B	15M6H8B	15M6H12B	15M6H16B
9/16"	9H	65,000 **(4,500)**	15M9H2B	15M9H4B	15M9H6B	15M9H8B	15M9H12B	15M9H16B
Male Ultra High								
5/16"	5U	152,000 **(10,500)**	15M5U2B	15M5U4B	15M5U6B	15M5U8B	15M5U12B	15M5U16B

* The pressure rating of any adapter is the value of the lowest rated connection in the fitting.

All technical and dimensional information subject to change. All general Terms and Conditions of sale, including limitations of our liability, apply to all products and services sold.

Accessories

» Pressure gauges, transducers and high pressure hoses

MAXIMATOR has been designing and manufacturing high pressure equipment for more than thirty years and has a worldwide reputation for quality and reliability, backed by one of the best service organizations in the industry.

High Pressure Valves feature:

- pressure gauges up to max. 101,000 psi **(7,000 bar)**
- robust and safe pressure transducers up to max. 116,000 psi **(8,000 bar)**
- comprehansive range of HP hoses for max. 58,000 psi **(4,000 bar)**

Note: When selecting multiple items, the pressure rating would be that of the lowest rated component.

Accessories Index	Page:
Gauges rated to 101,000 psi **(7,000 bar)**	2
Transducers rated to 116,000 psi **(8,000 bar)**	2
Connections	3
High pressure hoses rated to 58,000 psi **(4,000 bar)**	4

MAXIMATOR GmbH, Lange Straße 6, 99734 Nordhausen, Telefon +49 (0) 3631 9533 – 0, Telefax + 49 (0) 3631 9533 – 5010, www.maximator.de, info@maximator.de
All technical and dimensional information subject to change. All general Terms and Conditions of sale, including limitations of our liability, apply to all products and services sold.

Pressure gauges and transducers

Pressure gauges

Maximator provides pressure gauges up to max. 101,000 psi **(7,000 bar)**. Their connections are adjusted to the Maximator high pressure program (cf. the table below).

All pressure gauges are liquid damped and conform to accuracy class 1.0.

Pressure range psi (bar)	Catalog Number	Connection Type	Diameter in. (mm)	Accuracy class
14,500 **(1,000)**	3301.2107	1/2” BSP	2.48” **(63)**	1.0
14,500 **(1,000)**	3300.0152	1/2” BSP	3.9” **(100)**	1.0
23,200 **(1,600)**	3301.4414	1/2” BSP	3.9” **(100)**	1.0
36,000 **(2,500)**	3301.4249	1/2” BSP	3.9” **(100)**	1.0
36,000 **(2,500)**	3300.0153	4 H (9/16”-18 UNF)	3.9” **(100)**	1.0
58,000 **(4,000)**	3300.0167	4 H (9/16”-18 UNF)	6.3” **(160)**	1.0
87,000 **(6,000)**	3300.0168	4 U (9/16”-18 UNF)	6.3” **(160)**	1.0
101,000 **(7,000)**	3300.3251	5 U (5/8”-18 UNF)	6.3” **(160)**	1.0

Gauges with different pressure ranges, diameters and accuracy classes upon request.

Transducers

Maximator supplies robust and safe pressure transducers up to max. 116,000 psi **(8,000 bar)**. Main features of the transducers are their high accuracy and good longevity. Output 0 to 10 VDC.

Pressure range psi (bar)	Catalog Number	Connection Type	Temperature	Accuracy class
36,000 **(2,500)**	3301.3656	4 H (9/16”-18 UNF)	-4°F to 170°F **(-20°C to 80°C)**	0.5
58,000 **(4,000)**	3301.3657	4 H (9/16”-18 UNF)	-4°F to 170°F **(-20°C to 80°C)**	0.5
116,000 **(8,000)**	3301.5029	M20 x 1,5 female	-4°F to 170°F **(-20°C to 80°C)**	0.5

All technical and dimensional information subject to change. All general Terms and Conditions of sale, including limitations of our liability, apply to all products and services sold.

Connection B – BSP Female with copper gasket

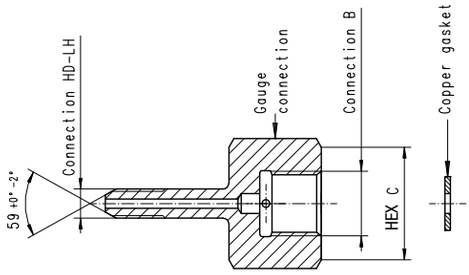

Typ	Catalog Number	Connection HD-LH	Connection B	HEX C
21A4M4GB	3780.2183	4M (1/4-28UNF-LH)	1/4 BSP	26,99 **(1.06")**
21A4M8GB	3780.2169	4M (1/4- 28UNF-LH)	1/2 BSP	36,51 **(1.44")**
21A6M8GB	3780.2170	6M (3/8-24UNF-LH)	1/2 BSP	36,51 **(1.44")**
21A9M8GB	3780.2179	9M (9/16-18UNF-LH)	1/2 BSP	36,51 **(1.44")**
21A12M8GB	3780.2193	12M (3/4-16UNF-LH)	1/2 BSP	36,51 **(1.44")**
21A16M8GB	3780.2194	16M (1-14UNF-LH)	1/2 BSP	36,51 **(1.44")**
36A4H8GB	3780.2180	4H (1/4-28UNF-LH)	1/2 BSP	36,51 **(1.44")**
36A6H8GB	3780.2181	6H (3/8-24UNF-LH)	1/2 BSP	36,51 **(1.44")**
36A9H8GB	3780.2182	9H (9/16-18UNF-LH)	1/2 BSP	36,51 **(1.44")**

NPT connections see adapters.

Connection B – BSP Female with copper gasket

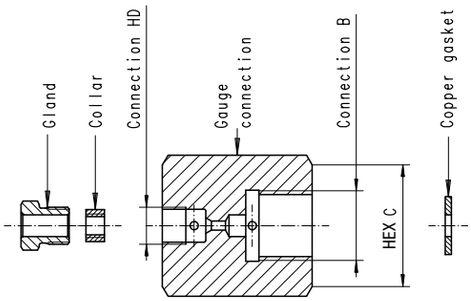

Typ	Catalog Number	Connection HD-LH	Connection B	HEX C	Pressure psi (bar)
21F4M4GB	3780.2187	4M (7/16-20UNF)	1/4 BSP	26,99 **(1.06")**	22,500 **(1,550)**
21F4M8GB	3780.2184	4M (7/16-20UNF)	1/2 BSP	36,51 **(1.44")**	22,500 **(1,550)**
21F6M4GB	3780.2188	6M (9/16-18UNF)	1/4 BSP	26,99 **(1.06")**	22,500 **(1,550)**
21F6M8GB	3780.2185	6M (9/16-18UNF)	1/2 BSP	36,51 **(1.44")**	22,500 **(1,550)**
36F4H4GB	3780.2189	4H (9/16-18UNF)	1/4 BSP	26,99 **(1.06")**	36,000 **(2,500)**
36F4H8GB	3780.2186	4H (9/16-18UNF)	1/2 BSP	36,51 **(1.44")**	36,000 **(2,500)**

NPT connections see adapters.

All technical and dimensional information subject to change. All general Terms and Conditions of sale, including limitations of our liability, apply to all products and services sold.

High pressure hoses

» Pressures to 58,000 psi (4,000 bar)

High pressure hoses

Maximator provides a comprehensive range of HP hoses in high-quality thermoplastic synthetic materials. Pressure substrates are of steel and compatible materials. These flexible connections are suited for max. operating pressures of 58,000 psi **(4,000 bar)**.

Upon request, Maximator also supplies HP hoses with glands and collars to make them fit for integration into high pressure systems up to 65,000 psi **(4,500 bar)**. Hoses for other operating pressures and nominal widths as well connection combinations can be supplied upon request.

High Pressure Connection

DKR Connection

Pressure range psi (bar)	Catalog Number	Connection Type	Type	Diameter in. (mm) outside	Diameter in. (mm) inside	Length in. (mm)
14,000 **(1,000)**	3300.0233	DKR 1/4" Union Nut	SK2005St	0.37 **(9.4)**	0.20 **(5)**	39 **(1000)**
14,000 **(1,000)**	3300.4073	DKR 1/4" Union Nut	SK2005St	0.37 **(9.4)**	0.20 **(5)**	79 **(2000)**
14,000 **(1,000)**	3300.0235	DKR 1/4" Union Nut	SK2005St	0.37 **(9.4)**	0.20 **(5)**	118 **(3000)**
26,000 **(1,800)**	3300.0191	DKR 1/4" Union Nut	SK4005St	0.44 **(11.2)**	0.20 **(5)**	39 **(1000)**
26,000 **(1,800)**	3300.0182	DKR 1/4" Union Nut	SK4005St	0.44 **(11.2)**	0.20 **(5)**	79 **(2000)**
26,000 **(1,800)**	3300.2082	DKR 1/4" Union Nut	SK4005St	0.44 **(11.2)**	0.20 **(5)**	118 **(3000)**
26,000 **(1,800)**	3300.2197	1/4"-28UNF-LH	SK4005St	0.44 **(11.2)**	0.20 **(5)**	39 **(1000)**
26,000 **(1,800)**	3300.3987	1/4"-28UNF-LH	SK4005St	0.44 **(11.2)**	0.20 **(5)**	79 **(2000)**
26,000 **(1,800)**	3300.3815	1/4"-28UNF-LH	SK4005St	0.44 **(11.2)**	0.20 **(5)**	118 **(3000)**
36,000 **(2,500)**	3300.0206	DKR 1/4" Union Nut	SK6005St	0.53 **(13.4)**	0.20 **(5)**	39 **(1000)**
36,000 **(2,500)**	3300.0207	DKR 1/4" Union Nut	SK6005St	0.53 **(13.4)**	0.20 **(5)**	79 **(2000)**
36,000 **(2,500)**	3300.0208	DKR 1/4" Union Nut	SK6005St	0.53 **(13.4)**	0.20 **(5)**	118 **(3000)**
36,000 **(2,500)**	3300.1278	1/4"-28UNF-LH	SK6005St	0.53 **(13.4)**	0.20 **(5)**	39 **(1000)**
36,000 **(2,500)**	3300.2384	1/4"-28UNF-LH	SK6005St	0.53 **(13.4)**	0.20 **(5)**	79 **(2000)**
36,000 **(2,500)**	3300.3423	1/4"-28UNF-LH	SK6005St	0.53 **(13.4)**	0.20 **(5)**	118 **(3000)**
36,000 **(2,500)**	3300.5599	3/8"-24UNF-LH	SK6005St	0.53 **(13.4)**	0.20 **(5)**	39 **(1000)**
36,000 **(2,500)**	3300.5887	3/8"-24UNF-LH	SK6005St	0.53 **(13.4)**	0.20 **(5)**	79 **(2000)**
36,000 **(2,500)**	3300.5416	3/8"-24UNF-LH	SK6005St	0.53 **(13.4)**	0.20 **(5)**	118 **(3000)**
58,000 **(4,000)**	3300.6042	1/4"-28UNF-LH	SK8005St	0.55 **(14.0)**	0.18 **(4.6)**	39 **(1000)**
58,000 **(4,000)**	3300.2927	1/4"-28UNF-LH	SK8005St	0.55 **(14.0)**	0.18 **(4.6)**	79 **(2000)**
58,000 **(4,000)**	3300.6063	1/4"-28UNF-LH	SK8005St	0.55 **(14.0)**	0.18 **(4.6)**	118 **(3000)**
58,000 **(4,000)**	3300.1409	3/8"-24UNF-LH	SK8005St	0.55 **(14.0)**	0.18 **(4.6)**	39 **(1000)**
58,000 **(4,000)**	3300.5712	3/8"-24UNF-LH	SK8005St	0.55 **(14.0)**	0.18 **(4.6)**	79 **(2000)**
58,000 **(4,000)**	3300.3069	3/8"-24UNF-LH	SK8005St	0.55 **(14.0)**	0.18 **(4.6)**	118 **(3000)**
58,000 **(4,000)**	3300.5713	9/16"-18UNF-LH	SK8005St	0.55 **(14.0)**	0.18 **(4.6)**	39 **(1000)**
58,000 **(4,000)**	3300.5988	9/16"-18UNF-LH	SK8005St	0.55 **(14.0)**	0.18 **(4.6)**	79 **(2000)**
58,000 **(4,000)**	3300.2048	9/16"-18UNF-LH	SK8005St	0.55 **(14.0)**	0.18 **(4.6)**	118 **(3000)**

All technical and dimensional information subject to change. All general Terms and Conditions of sale, including limitations of our liability, apply to all products and services sold.

Tools

MAXIMATOR offers manual Coning and Threading tools that are designed to prepare accurate tubing ends to accept the medium, high and ultra high pressure connections.

Tools feature:

- Manual Coning and Threading Coning tools are designed to thread up to 9/16” OD tubing.
- One size Coning and Threading tool with interchangeable bushings and thread dies eliminates multiple tool inventories.
- Internal needle bearings and high strength materials offers ease of operation and extended tool life.
- Coning blades are designed to cut both the angle and straight areas to insure good concentricity between the sealing surfaces.
- Precision Reseating Tools to repair damaged female high pressure connections without full disassembly of components.

MAXIMATOR offers a complete line of manual tools for the proper preparation of medium, high and ultra high pressure connections up to 9/16” OD tubing. For complete coning and threading instructions see MAXIMATOR’s website at **www.maximator.de.**

Note: When selecting multiple items, the pressure rating would be that of the lowest rated component.

Tools Index	Page:
Coning and Threading Tools	2
Reseating and Deburr Tools	3

MAXIMATOR GmbH, Lange Straße 6, 99734 Nordhausen, Telefon +49 (0) 3631 9533 – 0, Telefax + 49 (0) 3631 9533 – 5010, www.maximator.de, info@maximator.de

All technical and dimensional information subject to change. All general Terms and Conditions of sale, including limitations of our liability, apply to all products and services sold.

Tools

» Coning and Threading Tools

Maximator offers tools for coning and threading tubing up to 9/16” O.D. These are precise tools that allow manual coning and threading of medium, high and ultra high pressure tubing. Please refer to the Maximator website, **www.maximator.de** and click on the VFT button to find detailed instructions for the coning and threading process.

Coning Tools

The coning tool comes complete with blades, collet and tools. The blades and tool feed nut allow the user to control the cutting feed rate and face the end of the tube when complete. The blades and collet can be changed for other sizes, while using the same base tool.

Tubing Size O.D. x I.D. in. (mm)	Tubing Pressure psi (bar) @ R.T.	Connection Type	Coning Tool Complete Catalog Number	Replacement Part Information		
				Collet Part Number	Coning Blades Part Number	HSS Coning Blades Part Number
1/4 x .109 **(6.35 x 2.77)**	22,500 **(1,550)**	4M	CT4M	3781.1009	3781.1014	3781.1810
3/8 x .203 **(9.53 x 5.17)**	22,500 **(1,550)**	6M	CT6M	3781.1010	3781.1013	3781.1811
9/16 x .312 **(14.29 x 7.93)**	22,500 **(1,550)**	9M	CT9M	3781.1011	3781.1012	3781.1812
9/16 x .359 **(14.29 x 9.13)**	15,200 **(1,050)**	9M	CT9M.359	3781.1011	3781.1179	3781.1813
1/4 x .083 **(6.35 x 2.11)**	65,000 **(4,500)**	4H / 4U	CT4H	3781.1009	3781.0843	3781.1814
3/8 x .125 **(9.53 x 3.17)**	65,000 **(4,500)**	6H / 6U	CT6H	3781.1010	3781.1017	3781.1808
9/16 x .188 **(14.29 x 4.77)**	65,000 **(4,500)**	9H / 9U	CT9H	3781.1011	3781.1016	3781.1809
5/16 x .062 **(7.94 x 1.58)**	152,000 **(10,500)**	5U	CT5U	3781.0846	3781.0843	3781.1814

Threading Tools

The threading tool comes complete with the threading die and bushing. The thread is a left hand type. The thread die and bushing can be changed for other sizes, while using the same base tool.

Tubing Size O.D. x I.D. in. (mm)	Tubing Pressure psi (bar) @ R.T.	Connection Type	Left Hand Thread Size (UNF class 2)	Threading Tool Complete Catalog Number	Replacement Part Information	
					Die Part Number	Bushing Part Number
1/4 x .109 **(6.35 x 2.77)**	22,500 **(1,550)**	4M	1/4-28-LH	TT4	3781.1061	3781.1055
3/8 x .203 **(9.53 x 5.17)**	22,500 **(1,550)**	6M	3/8-24-LH	TT6	3781.1059	3781.1053
9/16 x .312 **(14.29 x 7.93)**	22,500 **(1,550)**	9M	9/16-18-LH	TT9	3781.1060	3781.1054
9/16 x .359 **(14.29 x 9.13)**	15,200 **(1,050)**	9M	9/16-18-LH	TT9	3781.1060	3781.1054
1/4 x .083 **(6.35 x 2.11)**	65,000 **(4,500)**	4H / 4U	1/4-28-LH	TT4	3781.1061	3781.1055
3/8 x .125 **(9.53 x 3.17)**	65,000 **(4,500)**	6H / 6U	3/8-24-LH	TT6	3781.1059	3781.1053
9/16 x .188 **(14.29 x 4.77)**	65,000 **(4,500)**	9H / 6U	9/16-18-LH	TT9	3781.1060	3781.1054
5/16 x .062 **(7.94 x 1.58)**	152,000 **(10,500)**	5U	5/16-24-LH	TT5	3781.1058	3781.1052

All technical and dimensional information subject to change. All general Terms and Conditions of sale, including limitations of our liability, apply to all products and services sold.

Reseating Tools

The reseating tool is designed to rework an existing damaged coned and threaded connection without full disassembly of the component. The reseating tool will resurface the sealing surfaces of the medium, high, and ultra high pressure connections up to 9/16" tubing.

Tubing Size O.D. x I.D. in. (mm)	Tubing Pressure psi (bar) @ R.T.	Connection Type	Reseating Tool Complete Catalog Number	Replacement Part Information		
				Cutter Part Number	Bushing Part Number	Gland Part Number
1/4 x .109 **(6.35 x 2.77)**	22,500 **(1,550)**	4M	RT4M	3781.0647	n/a	3781.0649
3/8 x .203 **(9.53 x 5.17)**	22,500 **(1,550)**	6M	RT6M	3781.0650	n/a	3781.0651
9/16 x .312 **(14.29 x 7.93)**	22,500 **(1,550)**	9M	RT9M	3781.0656	n/a	3781.0655
9/16 x .359 **(14.29 x 9.13)**	15,200 **(1,050)**	9M	RT9M	3781.0656	n/a	3781.0655
3/4 x .438 **(19.05 x 11.13)**	22,500 **(1,550)**	12M	RT12M	3781.3557	n/a	3781.3558
1/4 x .083 **(6.35 x 2.11)**	65,000 **(4,500)**	4H / 4U	RT4H	3781.0647	1700.0719	3781.0648
3/8 x .125 **(9.53 x 3.17)**	65,000 **(4,500)**	6H / 6U	RT6H	3781.0645	1700.0718	3781.0646
9/16 x .188 **(14.29 x 4.77)**	65,000 **(4,500)**	9H / 9U	RT9H	3781.0532	1700.0613	3781.0533
5/16 x .062 **(7.94 x 1.58)**	152,000 **(10,500)**	5U	RT5U	3781.0532	n/a	3781.0652

Deburring Tools

The deburring tool is designed to remove the metal burr on the inside diameter of the tubing after the cutting process. The reseating tool will work on all medium, high, and ultra high pressure connections up to 9/16" tubing.

Tubing Size O.D. x I.D. in. (mm)	Tubing Pressure psi (bar) @ R.T.	Connection Type	Deburring Tool Complete Catalog Number	Replacement Part Information Bushing Part Number
1/4 x .109 **(6.35 x 2.77)**	22,500 **(1,550)**	4M	DT4	3781.1381
3/8 x .203 **(9.53 x 5.17)**	22,500 **(1,550)**	6M	DT4	3781.1381
9/16 x .312 **(14.29 x 7.93)**	22,500 **(1,550)**	9M	DT4	3781.1381
9/16 x .359 **(14.29 x 9.13)**	15,200 **(1,050)**	9M	DT5	3781.1380
1/4 x .083 **(6.35 x 2.11)**	65,000 **(4,500)**	4H / 4U	DT4	3781.1381
3/8 x .125 **(9.53 x 3.17)**	65,000 **(4,500)**	6H / 6U	DT4	3781.1381
9/16 x .188 **(14.29 x 4.77)**	65,000 **(4,500)**	9H / 9U	DT4	3781.1381
5/16 x .062 **(7.94 x 1.58)**	152,000 **(10,500)**	5U	DT4	3781.1381

All technical and dimensional information subject to change. All general Terms and Conditions of sale, including limitations of our liability, apply to all products and services sold.

Technical Information

CERTIFIED
ISO-9001:2000

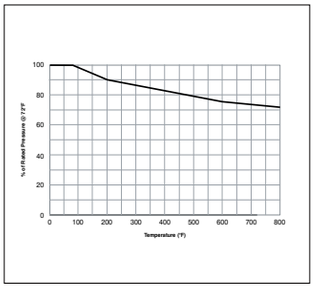

MAXIMATOR has been designing and manufacturing high pressure equipment for more than thirty years and has a worldwide reputation for quality and reliability. Our work is based on a certified quality management system (DIN EN ISO 9001) - the fundamental asset for successfully implementing technical knowledge and experience in the field of compl x systems.

Product features:

- Maximator´s Quality Management System meets all requirements of DIN EN ISO 9001, TÜV Certification
- All valves, fittings and tubing a e designed in accordance with the European Pressure Equipment Directive 97/23/EC.
- Pressure vs. Temperature chart for 316 cold worked stainless steel.

At Maximator our industry experience is unparalleled. Wheter General Industrial, Oil & Gas, Water Jet, Chemical or Petrochemical applic tions, our teams of experienced engineers and highly trained professionals have worked in the high pressure industry for decades and are prepared to support your needs. Our guiding principles are safety, quality and dependability. Our comprehensive inventory will ensure quick delivery that is unmatched in today´s environment.

Note: When selecting multiple items, the pressure rating would be that of the lowest rated component.

Technical Information Index	Page:
Pressure vs. Temperature chart	2
Temperature Table	3
Flow Coefficient Reference Curves	4 – 7
Assembly instructions and technical data	8 – 42
TÜV Certificate, EC Declaration of Conformity, ATEX, Achilles	43 – 46

MAXIMATOR GmbH, Lange Straße 6, 99734 Nordhausen, Telefon +49 (0) 3631 9533 – 0, Telefax + 49 (0) 3631 9533 – 5010, www.maximator.de, info@maximator.de
All technical and dimensional information subject to change. All general Terms and Conditions of sale, including limitations of our liability, apply to all products and services sold.

Technical Information

» Pressure vs. Temperature Chart

Technical Information

The information in this section is presented as general data for assisting a user in the selection of valves, fittings and tubing for elevated pressure and/or temperature applications in liquid or gas plumbing systems.

Maximator´s medium, high and ultra-high pressure valves, fittings and tubing are good for most services from light vacuum up to 152,000 psi, depending on the pressure series selected. Coned and threaded type tube fittings, standard on all Maximator valves and fittings, can be used for most liquids and gases including lighter gases such as Hydrogen and Helium.

Compatibility of the valve, fitting and tubing materials with the actual process fluid is ultimately the responsibility of the user.

Maximator can assist in applications but is not an authority on all process fluids. Some special applications such as Oxygen service require special cleaning and that option is available from Maximator.

Below is a reference chart showing the effects of pressure versus temperature of cold worked 316 stainless steel material.

Other factors such as creep resistance, packing design and materials, corrosion resistance, cyclic conditions, and other process variables may affect the use of components at elevated temperatures. Consult factory when operating above 800°F.

Pressure vs. Temperature Chart for cold worked 316 SS

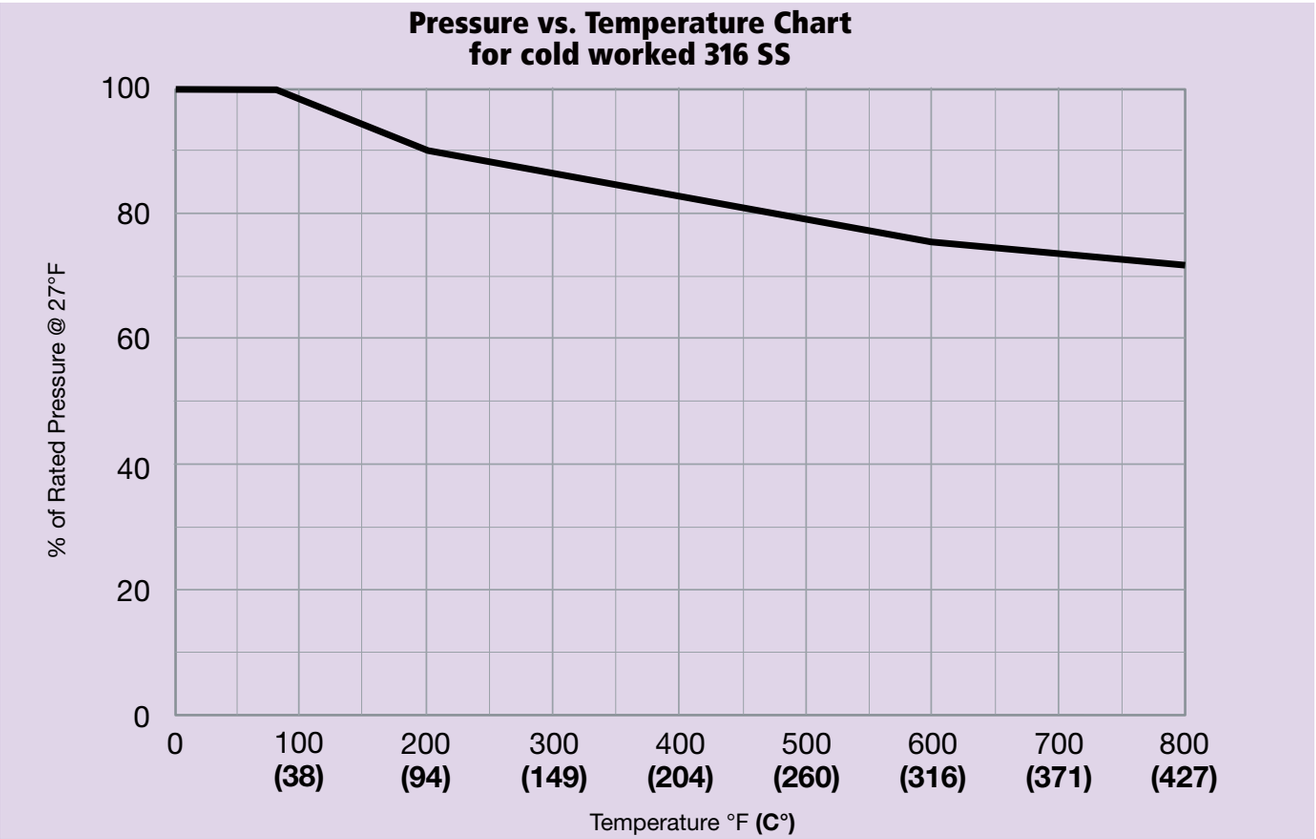

Note: The above pressure temperature chart is for 316 cold worked materials, this chart does not account for the temperature rating of packing or o-ring material which could be the limiting factor. Contact factory for other material limitations.

All technical and dimensional information subject to change. All general Terms and Conditions of sale, including limitations of our liability, apply to all products and services sold.

Temperature Table Valves, Fittings and Tubings

Series	Product	Medium Temperature min.	Medium Temperature max.	Ambient Temperatur	Remarks
Medium Pressure, High Pressure and Ultra High Pressure Series Tubing and Fittings	TU, N, F, X, T, L, BF, A, AVA, C, G, M, P, TC, UF	-423°F **(-252°C)**	1200°F **(650°C)**		
Pipe Fittings	F, X, T, L, BF	-330°F **(-200°C)**	520°F **(270°C)**		Recommendation: 1°F **(-17°C)** to 400°F **(204°C)** depending on application
Pipe Valves	15V.....	-60°F **(-50°C)**	450°F **(230°C)**		Recommendation: 1°F **(-17°C)** to 400°F **(204°C)** depending on application
	15V.....-B	-100°F **(-73°C)**	300°F **(150°C)**		
Medium Pressure Valves, High Pressure Valves	21V..... - 65V.....	-60°F **(-50°C)**	450°F **(230°C)**		
	21V.....-B - 65V.....-B	-100°F **(-73°C)**	300°F **(150°C)**		
	21V.....-TG - 65V.....-TG	-60°F **(-50°C)**	600°F **(315°C)**	-4°F to 140°F **(-20°C to 60°C)**	
	21V.....-GY - 65V.....-GY	-60°F **(-50°C)**	800°F **(425°C)**		
	21V.....-HT - 65V.....-HT	-60°F **(-50°C)**	1200°F **(650°C)**		
	21V.....-LT - 65V.....-L	-423°F **(-252°C)**	450°F **(230°C)**		
Ball Valve	..B.....	-4°F **(-20°C)**	300°F **(150°C)**		
Check Valves	...OC.. (Standard: FKM)	-4°F **(-20°C)**	390°F **(200°C)**		depending on O-Ring Material
	...BC..	-330°F **(-200°C)**	660°F **(350°C)**		
Safety Head Assembly	...SH..	-423°F **(-252°C)**	660°F **(350°C)**		
Filter	...DF..	-423°F **(-252°C)**	660°F **(350°C)**		
	...CF..	-423°F **(-252°C)**	660°F **(350°C)**		
Rupture Disc	RD-...	-100°F **(-73°C)**	660°F **(350°C)**		Burst Pressure set at 68°F **(20°C)**, otherwise Temperature needs to be specifie
Actuator	.....Y.....	-60°F **(-50°C)**	450°F **(230°C)**	-4°F to 140°F **(-20°C to 60°C)**	
	...-B-Y...	-100°F **(-73°C)**	300°F **(150°C)**		
Ball Valve Actuator	DA/SA	-4°F **(-20°C)**	300°F **(150°C)**	-4°F to 200°F **(-20°C to 95°C)**	
	EL/EH			-0,5°F to 160°F **(-18°C to 70°C)**	

All technical and dimensional information subject to change. All general Terms and Conditions of sale, including limitations of our liability, apply to all products and services sold.

Technical Information

» Flow Coefficient Reference Curves

Pipe Valves

1

Pressures to 15,000 psi (1,050 bar)

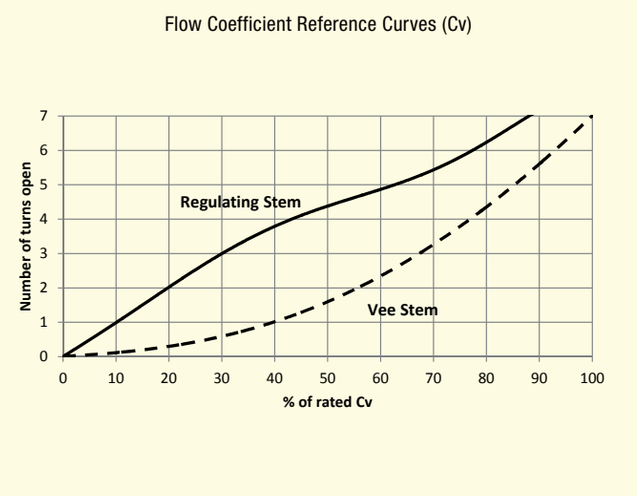

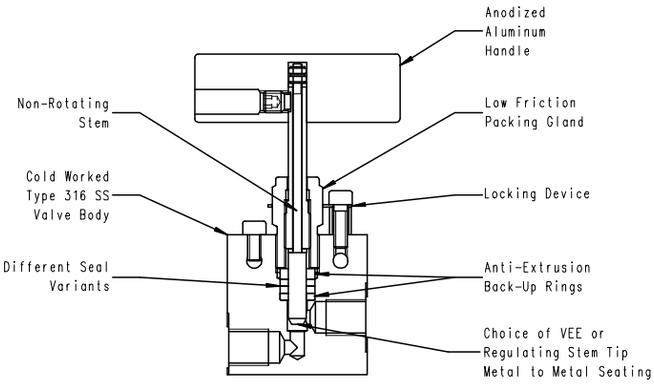

Valve Shown: 15V4B071

Medium Pressure Valves

2

Pressures to 22,500 psi (1,550 bar)

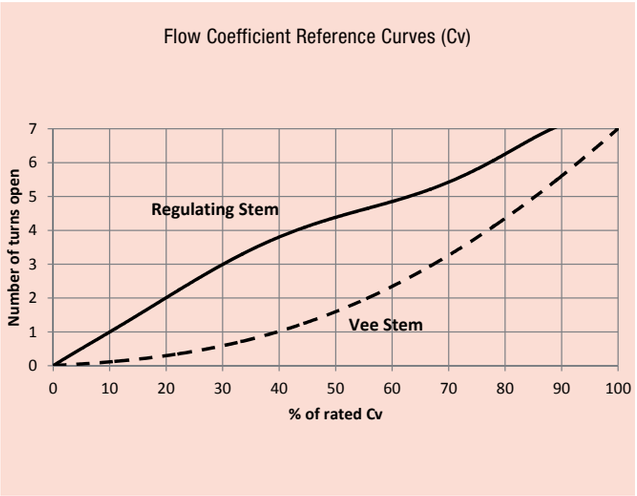

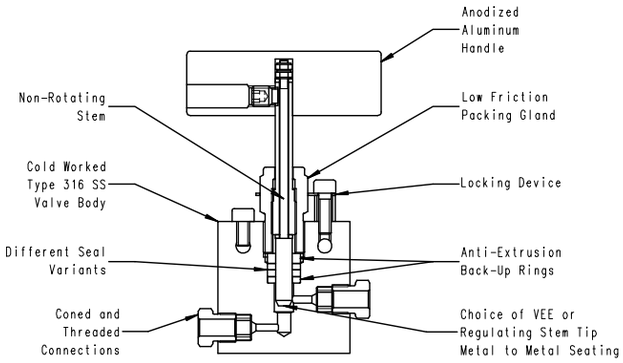

Valve Shown: 21V4M071

All technical and dimensional information subject to change. All general Terms and Conditions of sale, including limitations of our liability, apply to all products and services sold.

High Pressure Valves

Pressures to 36,000 psi (2,500 bar)

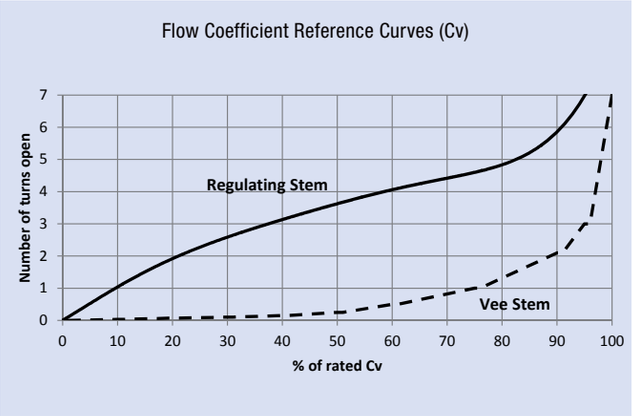

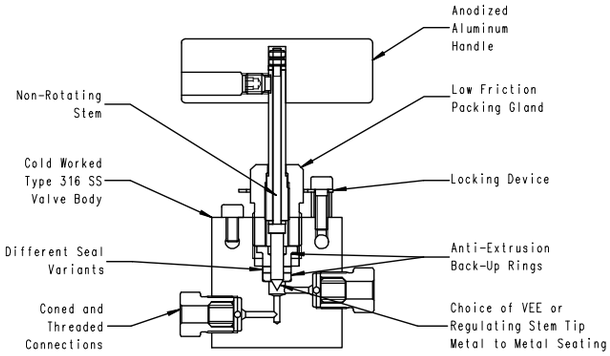

Valve Shown: 36V4H071

Pressures to 43,000 psi (2,965 bar)

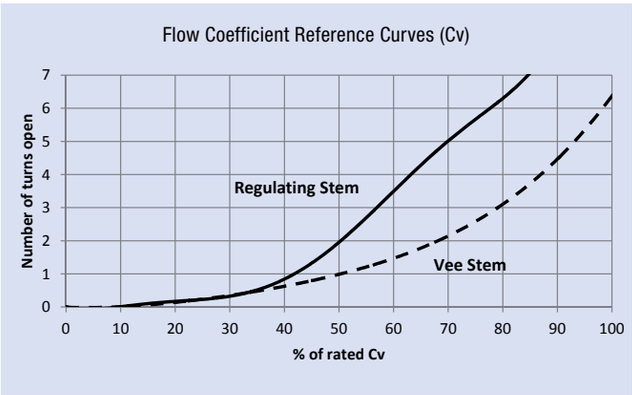

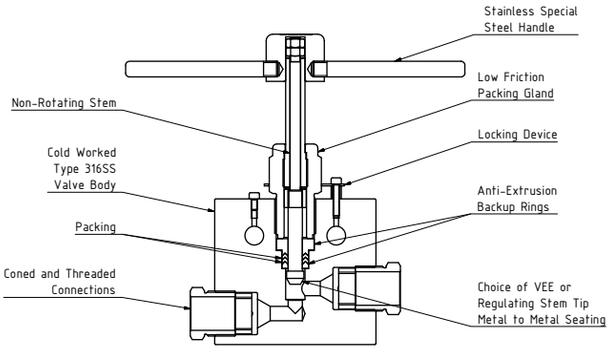

Valve Shown: 43V16M071

Pressures to 65,000 psi (4,500 bar)

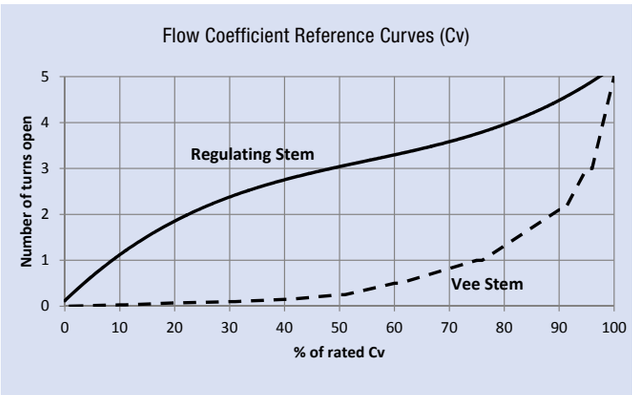

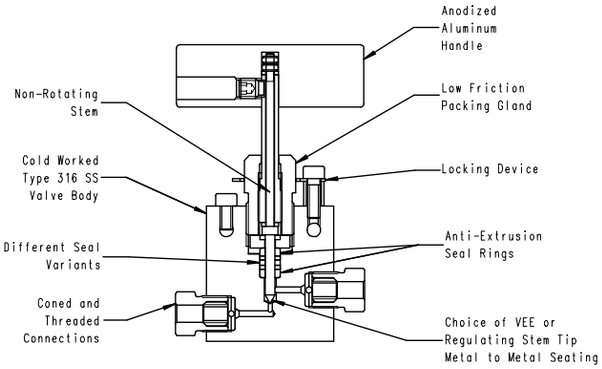

Valve Shown: 65V4H071

All technical and dimensional information subject to change. All general Terms and Conditions of sale, including limitations of our liability, apply to all products and services sold.

Ultra High Pressure Valves

Pressures to 101,000 psi (7,000 bar)

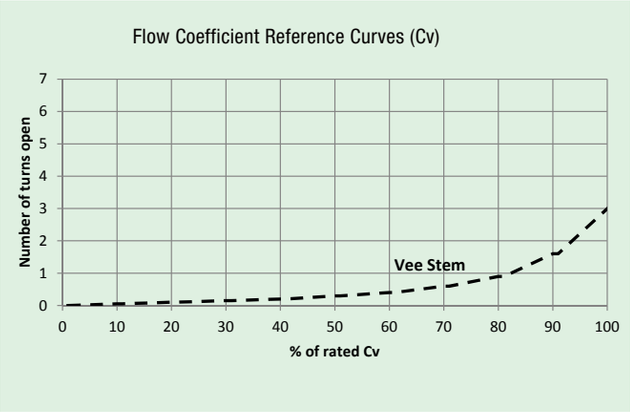

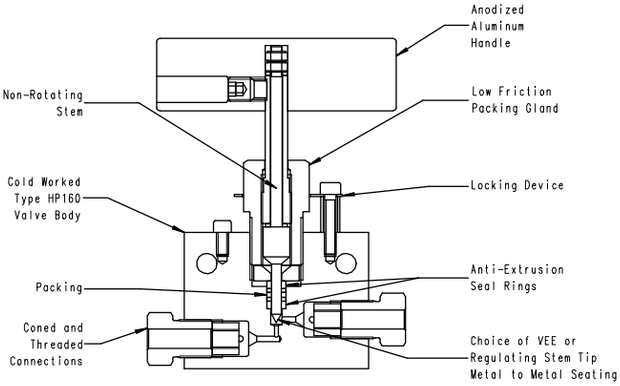

Valve Shown: 101V5U071

All technical and dimensional information subject to change. All general Terms and Conditions of sale, including limitations of our liability, apply to all products and services sold.

High Pressure Valves for Sour Gas Applications

Pressures to 22,500 psi (1,550 bar)

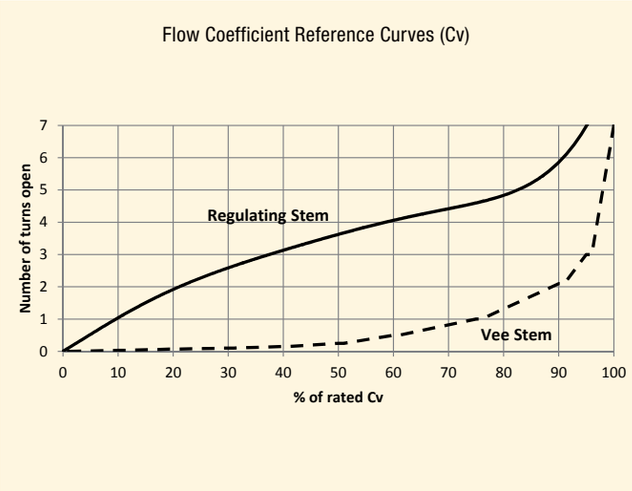

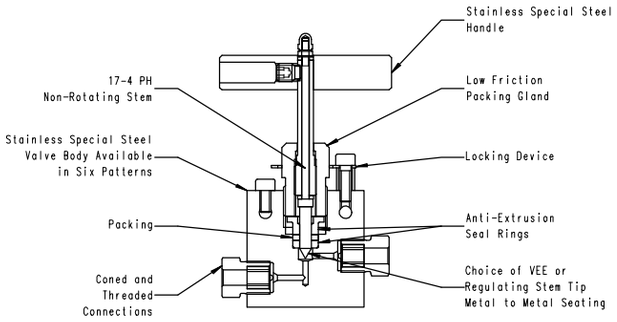

Valve Shown: 22V4H071-SOG

Pressures to 30,000 psi (2,070 bar)

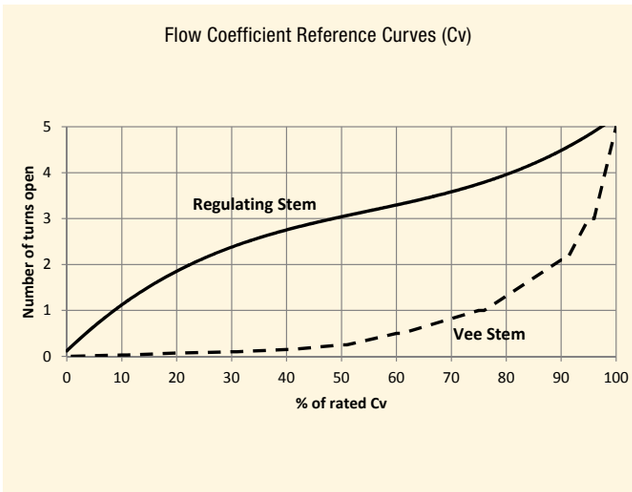

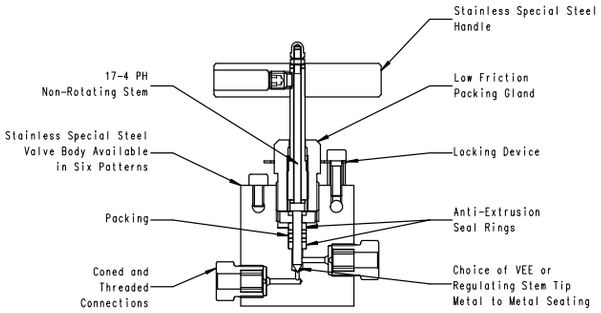

Valve Shown: 30V4H071-SOG

All technical and dimensional information subject to change. All general Terms and Conditions of sale, including limitations of our liability, apply to all products and services sold.

Assembly instructions and technical data

» Valves | Fittings | Tubing

Index

Assembly instructions and technical data Index		Page:
1.	Basic Information	9
2.	High pressure fluid systems: operating conditions	9
3.	Handling of high pressure tubing	10
4.	Screw connections in fluid systems	10
5.	Valves: Structure, types, accessories (drives) and use	12
5.1	Repair of seal and valve stems	13
5.2	Seal: Structure and composition of the standard packing	15
6.	Functional principle and technical data	16
7.	Installation	18
7.1	Needle valves and ball valves	18
7.2	Pneumatic actuated Y.NO and Y.NC valves	18
7.3	Disk, cup type and angle filters	19
7.4	Fittings	19
7.5	High pressure screw connections	19
7.6	Rupture disks	19
8.	Deinstallation	19
9.	Maintenance	20
10.	Maintenance and repair	20
10.1	Needle valves, ball valves and pneumatic actuated valves	20
10.2	Non return valve	20
10.3	Disc Line Filters	20
10.4	Cup-Type Line Filters	21
10.5	Angle filter	21
10.6	Fittings, adapters and high pressure screw connections	22
11.	Coning and Threading Tools	22
12.	Disposal	35
13.	Attachment	36
13.1	Torque Values	36
13.2	Anti-Vibration Torque Values	36
13.3	Needle Valve Torque Values	37
13.4	Minimum Bend Radius for 316SS Tubing	37
13.5	Tube Connection Details	38
14.	Flow Calculations - Example of a high pressure fluid system design	40
15.	Conversion Tables	41

All technical and dimensional information subject to change. All general Terms and Conditions of sale, including limitations of our liability, apply to all products and services sold.

1. Basic Information

Pipe systems play a central role in process technology and many other industrial areas. Most hydraulic systems designed for transporting fluids or gases work under complex operating conditions which is why the components and the screw connections needs to satisfy exacting requirements.

Information about the document

The document provides the specialist with an overview of the technical data and assembly options of the MAXIMATOR valves, fittings and tubing.

This documents looks at the respective functional principle of the components with all required application data. It also provides information about assembly, dismantling, maintenance and servicing.

The relevant accident prevention regulations and other generally accepted safety requirements must be complied with.

WARNING!

This combination of the symbol and signal word refers to possible hazardous situations that can lead to light, minor, major or even fatal injury if they are not avoided.

NOTE

This combination of the symbol and signal word refers to a possible hazardous situation that can lead to property and environmental damages if they are not avoided.

Tips and recommendations

This symbol highlights useful tips, recommendations and information for efficient and trouble-free operation.

2. High pressure fluid systems: operating conditions

The underlying conditions that need to be taken into account when designing fluid systems and selecting materials and components include the pressure levels, dynamic loads, high and low temperature, and the properties of the fluid.

High pressures of up to 10,500 bar and the dynamic loads, i.e. the alternating pressure exerted onto the components of a high pressure system, make exacting demands of the stainless steel that is used. These materials must have high strength and also be highly ductile. Another important criterion is the media-resistance of the materials. Therefore, austenitic stainless steel materials are usually used for tubing, fittings and valves.

It is recommended using autofrettage parts for applications that lie in the limit ranges of pressure resistance where dynamic loads are expected and therefore where the service life of the components must be optimised.

The process fluid also needs to be taken into account, because the components that transport light gases, such as hydrogen and helium, are much more difficult to seal than tubing carrying liquids, especially when they are pressurised.

Infobox Autofrettage:

Autofrettage (French.: Auto: self; frettage: creation of tensions) refers to a method for enhancing durability, in particular of pressure-cycle stressed components. Exerting a very high pressure (of up to 15,000 bar) into the part subject to internal pressure creates residual stress between the inner and the outer wall of the part that counters the premature failure due to fatigue breakage.

As a general rule: the higher the pressure range of a valve or fitting, the lower the probability of leaks for light gases. This principle also applies when selecting tubing because higher wall thicknesses for small pipe diameters provide better sealing surfaces.

Likewise, the choice of various components depends heavily on the fluid medium. Needle valves are much more suitable than ball valves for gases, and ball check valves are better for fluids and applications with high flow speeds. O-ring check valves are generally better suited for gases and applications with low differential pressures.

All technical and dimensional information subject to change. All general Terms and Conditions of sale, including limitations of our liability, apply to all products and services sold.

3. Handling of high pressure tubing

MAXIMATOR high pressure tubing are made of high-quality cold-worked stainless steels and are drawn without joints. They are used in all high pressure equipment, partially for extremely high pressures and for fluids and gases. Some aspects need to be taken into account when handling high pressure tubing:

- As the high pressure tubing are made of a cold-worked stainless steel they need to be protected against being heated to over 800°F (427°C) (see also Pressure vs. Temperature Chart for cold worked 316 SS on page 2 of this chapter). Heating above and beyond would weaken the material.
- For this reason, the high pressure tubing must not be welded or soldered.
- When bending tubing, the recommended minimum bending radii (see Attachment 13.4) need to be observed. A bending radius that is too small exerts excessive loads onto the tubing. Also, the cross-section of the high pressure tubing may not deform. No kinks may occur during the bending process. We recommend a bending tool with dies specific to the pipe diameter.
- Autofrettage tubing lose their better durability properties when shaped. Therefore, they may not be bent nor bent first before the autofrettage process.

The following figures show how to handle high-pressure tubing correctly:

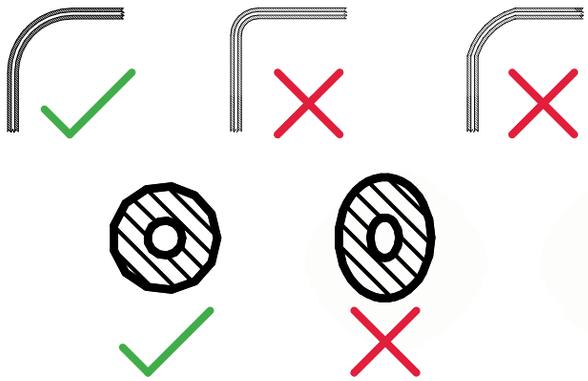

4. Screw connections in fluid systems

All screw connections in fluid systems have the task of connecting components reliably without leaks. The systems primarily differ in the way they are sealed and the way they are connected to the pipe.

There are various screw connection systems available for modern hydraulic systems. In addition to pipe thread connections, cutting ring connections, clamping ring connections, flanged screw fittings or cone or threaded connections are used.

Selection criteria
Choosing a suitable screw connection system primarily depends on the pressure within the fluid system, however, the sealing method and its functional principle is also an important criterion: a differentiation is made between metallic and soft-seal systems.

Another aspect that needs to be taken into account, especially in the case of soft-sealing systems, is the property of the fluid. In addition, the temperature(s) of the fluid and the environment, flow parameters such as flow rate and fluid viscosity, space requirements and installation conditions, the tube bending procedure and various ambient influences also need to be considered.

In some cases, other requirements need to be considered when selecting the screw connection system depending on the application. The selection options are also extensively restricted by international standards, specifications defined by the operator or approval regulations. The following Table provides an overview of the screw connection systems often used in fluid systems and their applications:

Screw connection system	Application	Typical rated pressures
Pipe thread screw connection	Hydraulic- and pneumatic applications, mobile hydraulics	approx. 1.050 bar
Compression fitting	Tool and Construction machines	approx. 700 bar
Cutting ring screw connection	Process engineering, Ship-building and offshore	approx. 1.000 bar
Flanged screw fitting	General and heavy engineering	approx. 500 bar
Coned and threaded screw connection	High Pressure Hydraulic and Pneumatic, Test equipment	approx. 10.500 bar

All technical and dimensional information subject to change. All general Terms and Conditions of sale, including limitations of our liability, apply to all products and services sold.

If fluid systems need to be designed for high pressures of more than 1.000 bar or if pressure peaks in these ranges need to be taken into account, the use of the cone and threaded screw connection is almost obligatory. The reason why these so-called high pressure screw connections are used for rated pressure levels of up to 10,500 bar is connected to the type of seal and the force required. High pressure screw connections primarily comprise three components:

- **Specially processed tubing end**
  A cone with an inclination of 58° and a left-handed thread (usually UNF) is cut onto the end of the tube.

- **Collar**
  The collar is screwed onto the left-handed thread and serves force transmission.

- **Gland**
  The gland serves to connect with the counter-piece into which a cone with an angle of 60° is cut. By screwing the pressure screw into the connection borehole with a defined torque, the tube/collar connection is pressed into the cone and mutually seal.

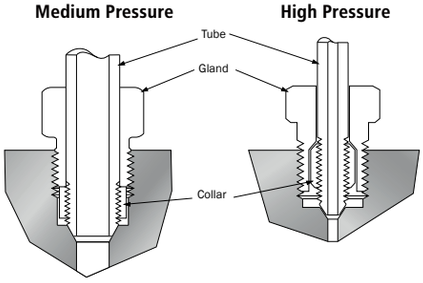

Structure of a high-pressure screw connection

» Assembly Instructions:

1. Insert the gland onto the tubing. Thread the left handed collar onto the tube until at least one or two threads are exposed from the tapered coned end.

2. Apply a compatible lubricant to the gland threads and the back side of the collar where it comes in contact with the gland. Also lubricate the tapered cone portion of the tube. This will help protect the sealing surfaces from galling during the assembly process.

3. Insert the tubing into the connection and tighten the assembly hand tight. Then use a torque wrench to tighten the connection to the appropriate value in the table of attachement 13.1. It is good practice to use an additional wrench to preventthe opposite connection from turning.

This type of connection ensures that the sealing surface between the tube and the counterpiece is as small as possible (In this way, the sealing force is kept as low as possible). To ensure that the connection does not tear in the event of a leak, there is a relief borehole in the counterpiece to which the tube is connected.

If the cone and threaded connections are used in systems in which external forces (e.g. vibrations) impact on the fluid system, the resulting torsion forces can release high pressure screw connections. Therefore anti-vibration screw connections are particularly recommended for these types of applications. The tables of attachement 13.1 and 13.2 state the prescribed torques for the respective screw connection type.

The torsion forces generated as a result of system vibrations are only absorbed by the cone and the collar in standard high pressure screw connections. Anti-vibration screw connections also have an additional collet. The clamping surface acts onto the outer diameter of the high pressure tube. This means that the surface that absorbs the torsion forces is significantly increased thereby preventing the screw connection from becoming loose.

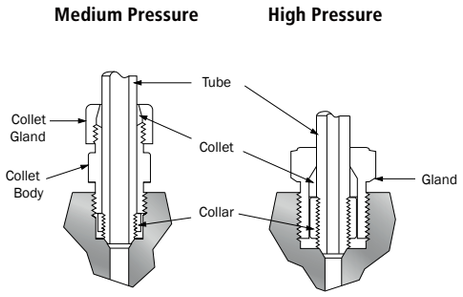

Structure of an anti-vibration screw connection

» Assembly Instructions:

1. The High Pressure Anti-Vibration Collet Gland Assembly can be installed using the same procedure as the standard coned and threaded connection (see above steps 1 to 3 but with torque values of 13.2). The high pressure collet grips the tube when the connection gland is tightened.

2. When using the Medium Pressure Anti-Vibration Collet Assembly, the procedure is the same as that of the standard coned and threaded connection (see above steps 1 through 3) with the additional step below.

3. Once the Collet Body has been tightened to the approriate torque value, use the torque wrench to tighten the Collet Gland to the appropriate value in the table of attachement 13.2. This will compress the Collet against the tube.

All technical and dimensional information subject to change. All general Terms and Conditions of sale, including limitations of our liability, apply to all products and services sold.

5. Valves: Structure, types, accessories (drives) and use

Due to the fact that high or low temperatures and fast heating or cooling speeds can impact on the sealing capability of the metal seals, the valve series should be selected after taking into account both the pressure resistance and also the static and dynamic temperature conditions. As a general rule: the smaller the sealing surface, the higher the temperature resistance. The following shows the types, design, the differences and the application ranges of these functional parts.

In the high pressure valve field a differentiation is made between needle valves and ball valves. Whilst needle valves are available for applications of up to 10,500 bar, ball valves are only designed for maximum 1.500 bar.

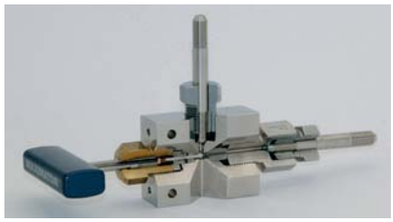

Figure 1

Figure 1 shows the structure of a needle valve. This valve is a 2-way angle valve with a replaceable valve seat. Also available are 2-way straight valves, 3-way valves with one or two pressure inlets and 3-way valves with 2-Stem for the pressure ranges Medium Pressure (1,550 bar) and High Pressure (4,500 bar).

The 2-way straight valves, 2-way angle valves and 3-way / 2-way pressure inlets are available for applications in the Ultra High Pressure (7,000 bar) range.

Figure 2 shows all components of the example valve 65V4H081. It is a straight valve. Depending on the specified pressure range, adjustments can be made regarding the seal packing. (For more information, see chapter 5.2)

When choosing for the application, it is not only the options that relate to the extreme temperature conditions that are important but in particular the shape of the valve spindle. Here, a differentiation is made between three different spindles (see table below):

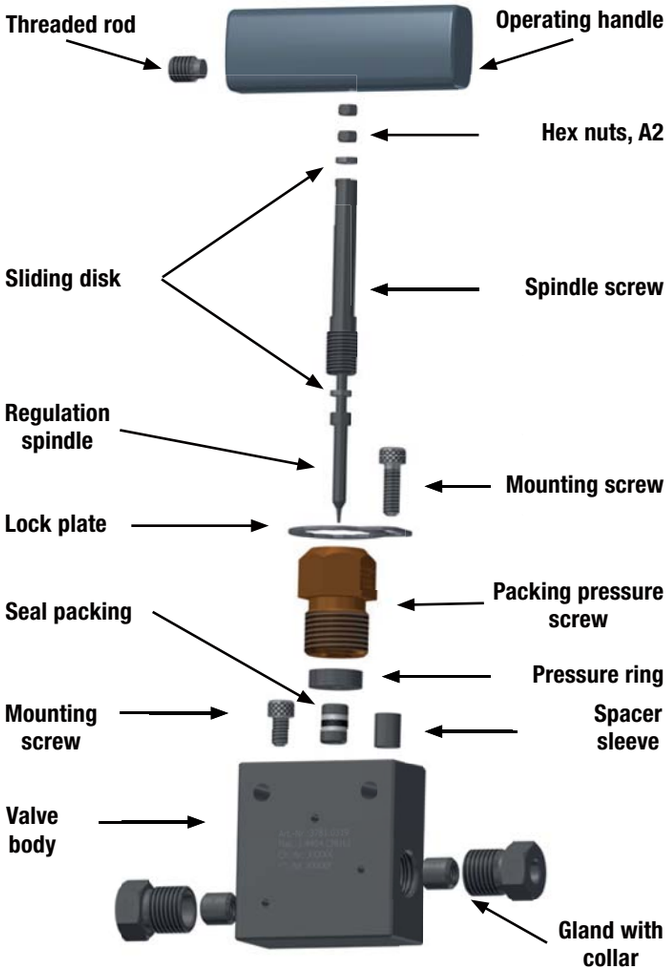

Figure 2

Important design features of the needle valves are the non-rotating stem and the metal-on-metal seal. The non-rotating stem effectively reduces the wear on the tip of the stem and the seat because the rotational movement when activating the valve is not transferred to the stem in a positive-lock manner. The metal-on-metal seal ensures high protection against corrosion and high durability.

Stem Type	Description	Use
V-stem	On/Off stem	Shutoff valve
Regulation stem	Conical stem tip	Throttle valve/shutoff valve
Micrometer stem	Fine dosage valve also with micrometer scale	Dosing of small reproducible flow rates

All technical and dimensional information subject to change. All general Terms and Conditions of sale, including limitations of our liability, apply to all products and services sold.

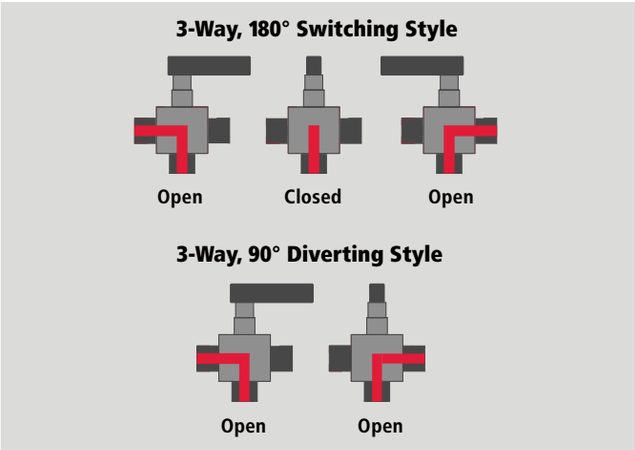

Figure 3

Ball valves are available as 2-way and 3-way model and are designed for closing/opening applications. The 3-way model is also available as a 90° switch and also 180° switch version (middle setting closed) (see also Fig.3). Compared to 2-part stem, ball valves with trunnion mounted, single-part valve stems prevent shear fracture and also reduce the impact of lateral forces.

Compared to the needle valves, ball valves have the advantage of faster actuation. Also, it is visible from outside at all times whether the valve is closed or open. A disadvantage is the sealing functionality. The use of ball valves for e.g. light gases is therefore not recommended.

There are pneumatic valve drives for automatic actuation of the manual valves. Depending on the application, drives of the type ‚Normal closed' or ‚Normal open' are used for needle valves. There are pneumatic and also electrical drives available for the ball valves.

pneumatic actuator (normal open)

pneumatic actuator (normal closed)

electrical actuator

Needle Valves **Ball Valves**

5.1 Repair of seal and valve stems

If you detect leaks in ball valves, they will need to be repaired by trained specialists. Independent repairs are not advisable due to the construction situation. If the manual valve starts to leak, follow the defined steps to seal the valve again correctly.

NOTE

! The minimum and maximum allowed temperature ranges of the suitable seals, screw connections or materials are stated in the Temperature Table on page 2 of this chapter.

Check seals and adjust if necessary

1. Depressurise the valve and remove it from the fluid system.
2. Ensure that the valve stem is in the fully open position.
3. Release the lock plate of the packing pressure screw
4. Attach the valve securely and tighten the packing pressure screw to the value stated in the product catalogue using a torque wrench. If you do not have a torque wrench, tighten the packing pressure screw by turning 1/16 of a turn.
5. Exert maximum pressure onto the valve to check the valve for leaks.
6. If there are still leaks on the valve seat or the packing, completely relieve the valve and repeat steps 4 and 5. If the seal still does not seal correctly after a few further attempts, the stem or possibly the seal need to be replaced. (See the paragraph below)
7. If the system is tight again, install the packing pressure screw and locking plate as specified.

Replace the seals or the valve stem

1. Repeat the upper steps 1-3 again.
2. Attach the valve securely and loosen or remove the packing pressure screw. The seal is automatically removed if the stem tip has a diameter larger than the seal parts. This applies to stems of the series 1/2" upwards. The seals need to be removed separately in the case of smaller valves.
3. MAXIMATOR manual valves are available with various stem models: single-part rotating/non-rotating; two-part stem [optionally with replaceable seat]. When replacing single-part non-rotating stems steps 4 to 7, two-part non-rotating spindles steps 8 to 9 and for rotating stems step 10.

All technical and dimensional information subject to change. All general Terms and Conditions of sale, including limitations of our liability, apply to all products and services sold.

Single-part non-rotating stems:

4. In the case of valves less than 1/2“, the seal packing that comprises a collar, sealing ring and support ring must be removed. Replace the seal packing and insert into the valve body. If the stems does not need to be replaced, also screw the packing pressure screw into the body of the valve and tighten it to the torque stated in the document.

5. Remove the handle from the stem by releasing the threaded pin with an Allen key. Then unscrew the stem from the packing pressure screw. Now remove the two hex nuts and the sliding disk on the upper part of the stem. Dismantle the existing part into its three components. To do this, pull the stem screw and the second sliding disk from the stem. In the case of valves with a larger stem tip, the pressure ring and seal also need to be removed. (see also Fig. 4)

6. Clean the sliding disks and all surfaces that come into contact with the sliding disks with a clean cloth. Use a non-hardening lubricant and lightly coat the surface of the slide ring and the threads of the stem screw.

7. In the case of stems with large stem tips, place the lower sliding disk, the seal and the sealing rings into the stem. The following applies to all other valves: start with the lower sliding disk and place this onto the stem before you connect these two parts with the stem screw.
   Now place the second sliding disk onto the stem screw. Then screw the first hex nut against the upper sliding disk and thread the stem completely into the packing pressure screw. Insert the packing pressure screw into the body of the valve and tighten to the torque stated in the document. Open the valve completely. Turn back one turn to achieve a little clearance.
   Now tighten the hex nut by hand and turn about 1/8-turn further with a wrench. In the next step, the second hex nut is inserted and also tightened by hand. Now hold the upper hex nut tight and release the lower hex nut from the sliding disk. Lock the lower hex nut with a 1/16-turn against the upper hex nut. Finally, place the hand piece onto the stem and connect both with each other by turning the threaded pin into the designated surface of the stem screw. (Caution! Do not turn too far).
   To achieve a non-rotating stem, the clearance between the stem screw and the shaft must be retained. The handle should have a maximum free travel of 10°. If the clearance is too large, the handle will need to be removed again and the upper hex nut loosened. Tighten the lower hex nut against the sliding disk. Attach the upper hex nut in compliance with the instructions above and check the system for clearance.
   If the defined free travel is satisfied, you can attach the handle again as described above. In a final step, the locking plate must be mounted.

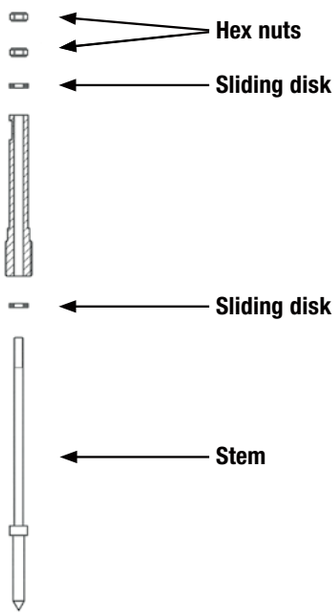

Figure 4

Two-part non-rotating stems:

8. In the case of valves with high or low temperature modifications, the sealing rings and the seal can be replaced. If a smaller stem is used, the casing and the support ring need to be removed from the old stem and attached to the new stem. Then place the lower sliding disk, the seal and the sealing washer onto the smaller stem. Then join the smaller stem to the larger one.
9. Use a non-hardening lubricant with a high percentage of solid lubricant (recommen-dation: pastes such as OKS 245) for the threads of the stem screw. Then screw the stem screw completely to the packing pressure screws or the valve seat so that the stem is in an open position. Whilst the casing is firmly clamped in a vice, tighten the packing pressure screw with the torque stated in the document (see chapter 7) and then tighten the lock nut. Use silicone grease or a similar lubricant for the sealing sur-faces of the support rings. Also coat the threads with a non-hardening lubricant with a high percentage of solid lubricant (recommendation: pastes such as OKS 245) before screwing the casing into the body of the valve. Please note the torques stated in the document (see attachement 13.3) and then secure the casing with the lock plate.

All technical and dimensional information subject to change. All general Terms and Conditions of sale, including limitations of our liability, apply to all products and services sold.

Rotating stem:

10. Remove the handle from the stem and release the stem from the packing pressure screw. Use a non-hardening lubricant with a high percentage of solid lubricant (recommendation: pastes such as OKS 245) for the threads of the new stem and screw these completely into the packing pressure screw. Align the threaded pin with the stem so that it engages on the flat surface of the stem and then screw the handle tight. Together with the inserted lower sliding disk, the seal and the sealing washer in the body of the valve, the packing pressure screw can be tightened to the torque stated in the document (see attachement 13.3). Finally, mount the locking plate.

Replacement of the valve seat

1. Depressurise the valve and remove it from the fluid system. Ensure that the valve stem is in the fully open position.
2. Remove the seat holder whilst the valve body is firmly clamped into place.
3. Remove the old seat and replace if necessary.
4. Use silicone paste or a similar lubricant for all sealing surfaces of the seat. Use a non-hardening lubricant with a high percentage of solid lubricant (recommendation: pastes such as OKS 245) for the threads of the seat holder.
5. Replace the seat and the seat holder. Ensure that the seat is placed flush on the body of the valve. Tighten the seat holder with the torque stated in the document (see attachement 13.3).

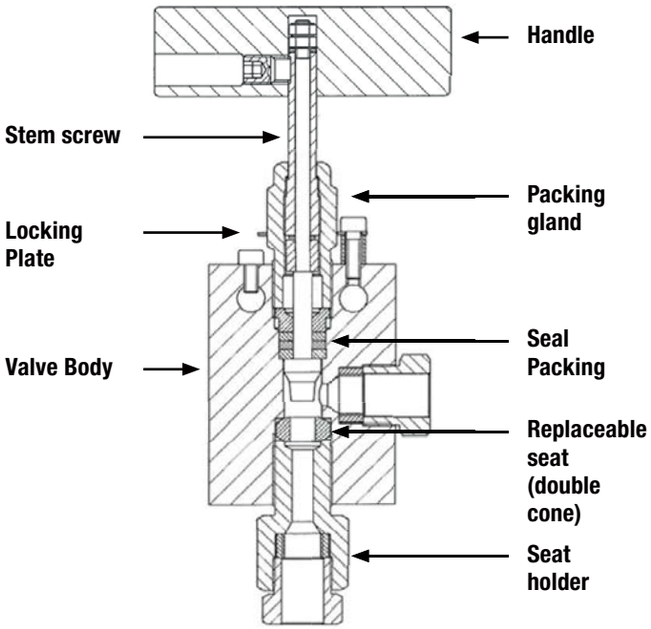

Figure 5

5.2 Seal: Structure and composition of the standard packing

The sealing material used are generally PTFE and carbon sealing washers with a metallic or plastic back up. However, the packing can be adapted in a number of ways depending on the purpose of the valves. The item numbers of the packing are stated in the technical drawings or can be requested from MAXIMATOR GmbH.

Figure 6: Sealing washer (middle) and back up washers (example 21V9M packing)

Figure 6 shows the components of a packing of the valve series 21V9M. The middle ring (black) is a sealing washer. These all look the same for all packing and are made of PTFE and carbon. Only the dimensions of the sealing washers vary depending on the valve series. On the outside you can see both back up washer variants. On the right (shiny) is a metallic back up washer (material 1.4404 [316L]) and on the left (white) a plastic ring (material PEEK).

Depending on requirements, the compositions of the back up washers may vary for different valve series.

During assembly ensure that the sealing washer is always located between the pressure ring and at least one back up washer. The sealing washer can therefore never form the last part of the packing. (Exception 22V…-SOG & 36V series)

In some cases the sealing washer is surrounded by two back up washer. (See also Fig.7 & Fig.8)

Figure 7: Spindle with packing single (example 21V4M /21V6M)

Figure 8: Spindle with packing together (example 21V4M /21V6M)

All technical and dimensional information subject to change. All general Terms and Conditions of sale, including limitations of our liability, apply to all products and services sold.

NOTE

! The back up washer that make up the closure of the seal packing, i.e. those closet to the stem tip, must always be mounted with the chamfered side facing the stem tip.

One special case involves packing of the valve series with borehole diameters of 3/4“ (12M) and 1“ (16M). In this case, two sealing washer are used and all parts are delivered as ‚serrated‘. The design is shown in figures 9 to 11.

Figure 10: Structure parts packing 12M/16M

Figure 9: Components packing 12M/16M

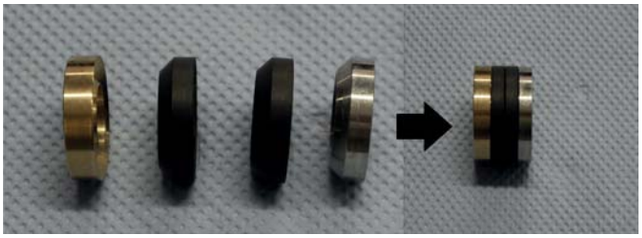

Figure 11: Assembly sequence packing 12M/16M

6. Functional principle and technical data

	Needle Valves	Ball Valves
Method of functioning / Use	Pressure-sealed shutting off of liquids and gases	
Type of load	Valves are designed for static loads. Life expectancy of the valves is reduced under dynamic load conditions.	
Media temperature	-50°C up to +230°C (-60°F up to +450°F) Max. pressure drops with rising temperature. (see P/T diagram)	-20°C up to +150°C (-4°F up to +302°F) Max. pressure drops with rising temperature. (see P/T diagram)

	Air actuated Y.NO, Y.NC - Valves	Air actuated valves
Method of functioning / Use	Designed or pressure-sealed shutting off of fluids and gases. The valves are operated through pneumatic cylinders. 3/2-way pneumatic valves are recommended as drive units.	
Type of load	Valves are designed for use under static loads. Use under dynamic loads will reduce the valves’ life expectancy.	
HP media	Only media included in our media resistance list may be employed.	
Drive media	Valve selection may only be performed with compressed air or an inert gas until a pressure of 10 bar.	
Media temperature	For the Actuator: -30°C up to +95°C (-22°F up to +203°F)	For the Actuator: -30°C up to +80°C (-22°F up to +176°F) -50°C up to +150°C (-58°F up to +302°F) for the HP-sealing Max. pressure decreases with rising temperature.
Max. air drive pressure	See table for the corresponding valve type	
Material of air actuator	anodized aluminum	
Air connection	1/8 NPT female	

All technical and dimensional information subject to change. All general Terms and Conditions of sale, including limitations of our liability, apply to all products and services sold.

	Check Valves	Disc-, Cup-Type-, Angel-Filter, Filterinlets
Method of functioning / Use	Used to shut off flow in one direction and for pressure-sealed conveyance of liquids and gases	Filters collect solid matter particles from passed through fluids and gases. The maximum filter differential pressure is 10 bar. The characteristic filter curves indicate maximum throughput rates. Please, not that the differential pressure rises with increa-sing soling. Hence, replace filter cartridges in good time.
Type of load	Designed for static loads. Life expectancy of the valves is reduced under dynamic load conditions.	
Media temperature	O-ring non-return valve: FKM O-ring: -20°C up to +200°C (-4°F up to +392°F) NBR O-ring: -50°C up to +100°C (-58°F up to +212°F) Ball-type non-return valve: -200°C up to +350°C (-330°F up to +662°F) Caution: Selection of the O-ring depends on the media to be used! Max. pressure drops with rising temperature. (see P/T diagram)	-252°C up to +350°C (-423°F up to +662°F) Max. pressure drops with rising temperature. (see P/T diagram)

	Fittings, Adapter	High Pressure Connections
Method of functioning / Use	Pressure-sealed conveyance of liquids and gases	Pressure-sealed connection of HP components, plugs for pressure-sealed closing of HP connections.
Type of load	Designed for static loads. Life expectancy of the reducing pieces is reduced under dynamic load conditions.	
Media temperature	-252°C up to +650°C (-423°F up to +1200°F) Max. pressure drops with rising temperature. (see P/T diagram)	-20°C up to +150°C (-4°F up to +302°F) Max. pressure drops with rising temperature. (see P/T diagram)

	Rupture disks
Method of functioning / Use	The MAXIMATOR rupture disks are only designed for use in MAXIMATOR safety head assamblies with the collar safety heads 3771.1092 or 3781.1092.
Orifice	¼“ (6.35mm)
Rupture range	See type plate
Temperature	-73°C to +350°C (-100°F to +660°F) - bursting pressure in relation to 20°C
Type	flat to 600 bar or hat-shape from 600 bar

All technical and dimensional information subject to change. All general Terms and Conditions of sale, including limitations of our liability, apply to all products and services sold.

7. Installation

7.1 Needle valves & ball valves

Valve (for front panel installation):

1. Release threaded pin, pull operating handle from the stem.
2. Dismantle cylinder screw and lock plate.
3. The manual valve can now be attached in a front plate using the cylinder screw. The installation position can be selected freely (if necessary a longer cylinder screw may be required for thicker front plates).
4. Insert operating handle onto the stem screw again and tighten using the threaded pin with max. 8 Nm for 1/4“, 3/8“ and 9/16“ 4500bar (thread M8); 12 Nm for 9/16“ 1550 bar, 5/16“, 3/4“ and 1“ (thread M10).

NOTE

! Securing the manual valve on the two designated attachment boreholes is always recommended (except for front panel installation), because otherwise the screw connections could become loose when the valve is actuated.

Assembly of high pressure tubes:

1. Slide the glans over the HP tube.
2. Screw on the collar up to the end of the thread and turn back by one turn (left-handed thread). It should be noted that 1-2 threads should be left exposed between the sealing cone and the collar.
3. Screw the gland into the body connection drill hole and tighten with the specified torque according to the below table.

NOTE

! If possible (and if the medium allows it), use a suitable lubricant (e.g. copper paste) for all threads and sealing cones!

Tightening torque for pressure screws:

Pressure connec-tion	Tube connection dimensions	O.D. Tube	Gland Wrench size (WS)	Torque value
bar	Inches	mm	Inches (mm)	Nm
1550	1/4	6.35	1/2 (12.7)	28
	3/8	9.53	5/8 (15.9)	41
	9/16	14.30	15/16 (23.8)	75
	3/4	19.05	1-3/6 (30.2)	122
	1	25.40	1-3/8 (34.9)	204
2500 / 4500	1/4	6.35	5/8 (15.9)	34
	3/8	9.53	13/16 (20.6)	68
	9/16	14.30	1-3/16 (30.2)	150
7000	1/4	6.35	5/8 (15.9)	34
	3/8	9.53	13/16 (20.6)	68
	9/16	14.30	1-3/16 (30.2)	150
10500	5/16	7.94	3/4 (19.05)	95

(The torques may vary slightly for various lubricants.)

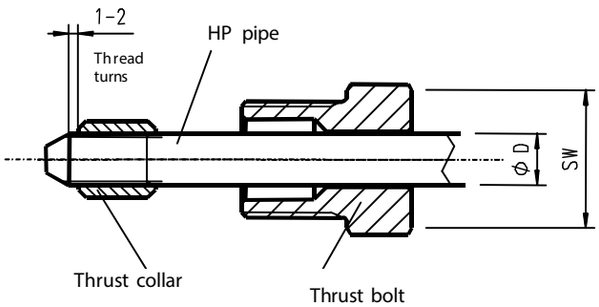

7.2 Pneumatically controlled Y.NO and Y.NC valves

The side boreholes (Ø 7 mm) in the yoke are intended for assembly of the valves.

NOTE

! Securing the manual valve on the two designated attachment boreholes is always recommended (except for front panel instal-lation), because otherwise the screw connections could become loose when the valve is actuated.

All technical and dimensional information subject to change. All general Terms and Conditions of sale, including limitations of our liability, apply to all products and services sold.

7.3 Disk, cup type and angle filters

During assembly, check the direction of flow. The angle filter should be installed so that the filter element can be replaced from below.

7.4 Fittings

Bulkhead fitting:

1. Release the hex nut from the screw connection.
2. Push the screw connection through the borehole (borehole diameter as stated in table below).
3. The re-tighten the hex nuts.

Type	Bore-hole diameter Inches (mm)
21BF4M	0.81 (20.6)
21BF6M	0.94 (23.9)
21BF9M	1.12 (28.5)
21BF12M	1.37 (34.8)
21BF16M	1.68 (42.6)
43BF16H	1.68 (42.6)
65BF4H	0.94 (23.9)
65BF6H	1.12 (28.5)
65BF9H	1.43 (36.3)
101BF4U	0.94 (23.9)
101BF6U	1.12 (28.5)
101BF9U	1.43 (36.3)
152BF5U	1.43 (36.3)

7.5 High-pressure screw connections

Plugs:

1. Push the plug into the gland.
2. Screw gland into the body connection and tighten with torque stated in the table: Tightening torque for pressure screws.

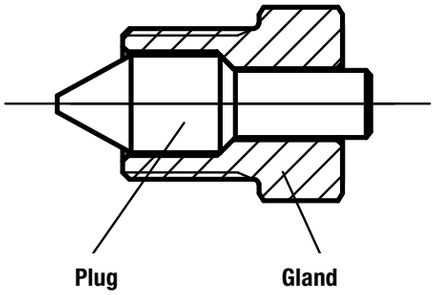

7.6 Rupture disks

Check the rupture pressure prior to rupture disk installation. To this end, the rupture pressure as indicated on the rupture disk must be compared to the value stated on the type plate. Sealing surfaces shall be inspected prior to assembly, if you wish to replace a rupture disk or want to place it in a used safety head assembly. Only intact surfaces en-sure proper function of components. Defective parts must be replaced. Also check the internal diameter of the hold-down ring. The borehole must lie within a tolerance range of 6.35 mm ± 0.02 mm. In case of deviation, replace the pressure piece.

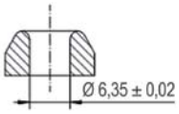

NOTE

! A deformed hold-down ring results in rupture pressure modifications. Depending on rupture disk design (flat or hat-shaped) the rupture disk shall be assembled in front of or behind the hold-down ring.

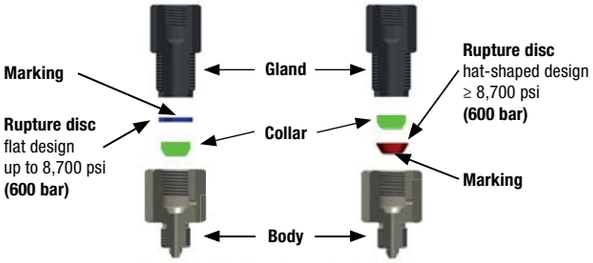

Figure 12: Rupture disk forms

The tightening torque for the hold-down nut based on a thread treated with lubricant paste is indicated on the rupture disk type label. Figure 12 shows the two rupture disk forms. This is a flat or hat-shaped rupture disk that can be used depending on the pressure requirements.

NOTE

! An unsuitable tightening torque results in leakages and modifi-cations of rupture pressure. If possible (and if operating conditions allow), use a suitable lubricant (e.g. copper paste) for all threads and sealing cones.

8. Deinstallation

Dismantling takes place in the reverse order of assembly.

NOTE

! Ensure that the system is depressurized before dismantling.

All technical and dimensional information subject to change. All general Terms and Conditions of sale, including limitations of our liability, apply to all products and services sold.

9. Maintenance

MAXIMATOR valves, fittings and tubing are generally maintenance-free.

Exceptions are the MAXIMATOR filters. The filter elements need to be replaced when soiled. A suitable interval for the regular exchange of the filter elements must be defined by the operator.

10. Maintenance and repair

Only qualified personnel may carry out repairs.

10.1 Needle valves, ball valves & pneumatic valves

Only qualified personnel may carry out repairs.

WARNING!

The NC valves have a tension spring and this must be released before opening the air drive. The spring may only be relieved and tighten when the valve is actuated (open position).

Fault	Possible cause	Remedy
Valve won't close	Stem and/or seat or ball seal faulty	Replace the stem. Replace the seat or body or ball seal
Medium escapes from the relief borehole at the Pressure connections	Incorrect assembly of the pressure connection	Check assembly.
	Cone surface damaged.	Rework the cone surface with the deburring tool or rework the pipe.
Medium escapes from the relief borehole during packing	Initial pressure on the packing seal is too low.	Packing gland must be adjusted to the respective torque value.
	Packing and/or stem damaged.	Exchange the damaged components.

All parts of the valves can be purchased as spare parts from MAXIMATOR GmbH. You will find the order numbers on the drawing included with each valve. Due to the fact that more than one seal or component is generally worn, we have created spare part kits. The compo-sition of the spare parts kits should be taken from the drawings where the corresponding order numbers can also be found.

When ordering spare parts, please state the order code and valve type that are printed on the valve body. We can also carry out repairs in our factory. Our qualified service technicians are available to help you.

Torque for packing gland:

Valve Type bar	Connection Inches	Torque value Nm
1550	1/4	41
	3/8	41
	9/16	82
	3/4	150
	1	200
2500	1/4	61
	3/8	61
	9/16	61
4500	1/4	48
	3/8	48
	9/16	48
7000	5/16	82

10.2 Non Return valve

All parts of the non return valves can be purchased as spare parts from MAXIMATOR GmbH. When ordering spare parts, please state the order code and valve type that are printed on the return valve body. We can also carry out repairs in our factory. Our qualified service technicians are available to help you.

Fault	Possible cause	Remedy
The media leaks at the release drill hole for pres-sure connections.	Incorrect assembly of the pressure connection	Check assembly.
	Cone surface damaged.	Rework the cone surface with the deburring tool
Medium flows in shut-off direction	Seal / seat faulty	Replace seal / seat

10.3 Disc Line Filters

Before removing the filter elements, the filter must be dismantled as described below.

Removal of the filter element:

1. Release gland and removes with the plugs.
2. Press all filter elements with a plastic mandrel out of the

All technical and dimensional information subject to change. All general Terms and Conditions of sale, including limitations of our liability, apply to all products and services sold.

body of the filter.

3. Push the filter body over the caulking anvil. Direction of flow toward the caulking anvil.
4. Place the finer filter elements into the body of the filter first, and then caulk with the Maximator caulking mandrel and several hammer strikes.
5. Use a lamp to check if the filter leaks. If a gap of light is visible, the filter element needs to be compressed more strongly.
6. Place the distance washer into the filter body.
7. Insert the coarser filter washer and caulk.
8. Replace the plugs and pressure screws again. [200 Nm at 9/16“ 1550 and 4500 bar; 150 Nm at 1/4“ and 3/8“ 4500 bar]

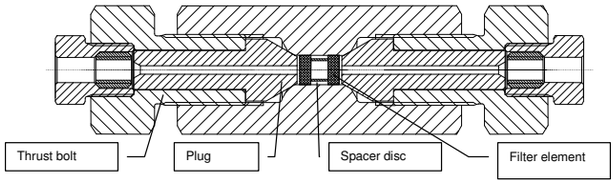

Figure 13: Structure of a disc filter

Fault	Possible cause	Remedy
Medium escapes from the relief borehole at the Pressure connections	Incorrect assembly of the pressure connection.	Check assembly.
	Cone surface damaged.	Rework the cone surface with the deburring tool

All parts of the disk filter can be purchased as spare parts from MAXIMATOR GmbH. When ordering spare parts, please state the order code and filter type that are printed on the filter body.

We can also carry out repairs in our factory. Our qualified service technicians are available to help you.

10.4 Cup-Type Line Filters

Before removing the filter elements, the filter must be dismantled as described below.

Removal of the filter element:

1. Loosen gland and remove with the filter seat.
2. Pull old filter element from the filter seat
3. Insert a clean filter element and knock lightly into the filter seat with a plastic hammer.
4. Re-insert the filter seat and screw-in the gland. [200 Nm at 9/16“ 1550 and 4500 bar; 150 Nm at 1/4“ and 3/8“ 4500 bar ; 100 Nm at 1/4“ and 3/8“ 1550 bar]

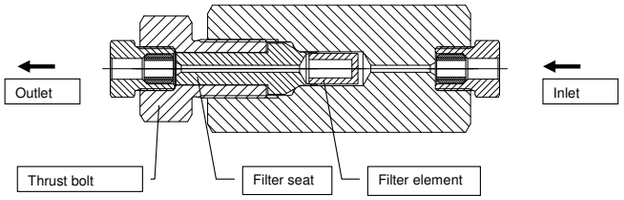

Figure 14: Structure of a cup/type filter

Fault	Possible cause	Remedy
Medium escapes from the relief borehole at the Pressure connections	Incorrect assembly of the pressure connection.	Check assembly.
	Cone surface damaged.	Rework the cone surface with the deburring tool

All parts of the cup-type filter can be purchased as spare parts from MAXIMATOR GmbH. When ordering spare parts, please state the order code and filter type that are printed on the filter body.

We can also carry out repairs in our factory. Our qualified service technicians are available to help you.

10.5 Angle filter

Remove the filter element without dismantling the entire filter from the pressure system (angle filter):

1. System must be depressurized.
2. Loosen gland and remove with the plug.
3. Loosen the old filter element carefully with a small screwdriver and remove.
4. Insert a clean filter element and knock lightly into the filter seat with a soft mandrel (plastic).
5. Re-insert the plug and screw on the gland with 150 Nm.

All technical and dimensional information subject to change. All general Terms and Conditions of sale, including limitations of our liability, apply to all products and services sold.

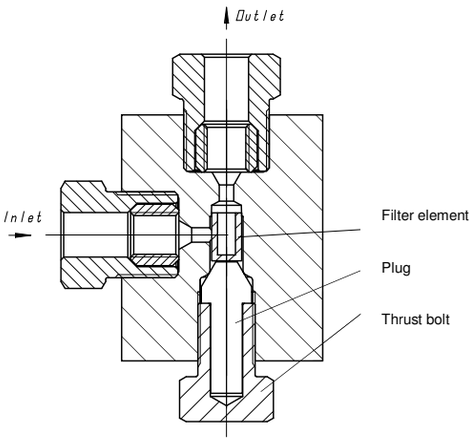

Figure 15: Structure of a angle filter

Fault	Possible cause	Remedy
The media leaks at the release drill hole for pressure connections.	Incorrect assembly of the pressure connection	Check assembly.
	Cone surface damaged.	Rework the cone surface with the deburring tool

All parts of the disk filter can be purchased as spare parts from MAXIMATOR GmbH. When ordering spare parts, please state the serial number, order code and filter type that are printed on the filter body.

We can also carry out repairs in our factory. Our qualified service technicians are available to help you.

10.6 Fittings & adapters & high-pressure screw connections

Fault	Possible cause	Remedy
The media leaks at the release drill hole for pressure connections.	Incorrect assembly of the pressure connection	Check assembly.
	Cone surface damaged.	Rework the cone surface with the deburring tool

All parts of the fittings can be purchased as spare parts from MAXIMATOR GmbH. You will find the order numbers on the drawing included with each fitting. Due to the fact that more than one seal or component is generally worn, we have created spare part kits. The compo-sition of the spare parts kits should be taken from the drawings where the corresponding order numbers can also be found.

11. Coning and Threading Tools

Functional principle / use:

The MAXIMATOR coning and threading tools must only be used for the finishing of high-pressure tubing.

Most parts of the coning tool are identical for the various high-pressure con-nections. Only different collets and cutting plates need to be used.

The threading tools for the 1550 bar 4500 bar and 7000 bar series are identical. Only the guide bushes and dies need to be re-placed for the various tubing diameters.

All technical and dimensional information subject to change. All general Terms and Conditions of sale, including limitations of our liability, apply to all products and services sold.

11.1 Component parts and configuration of the coning tool

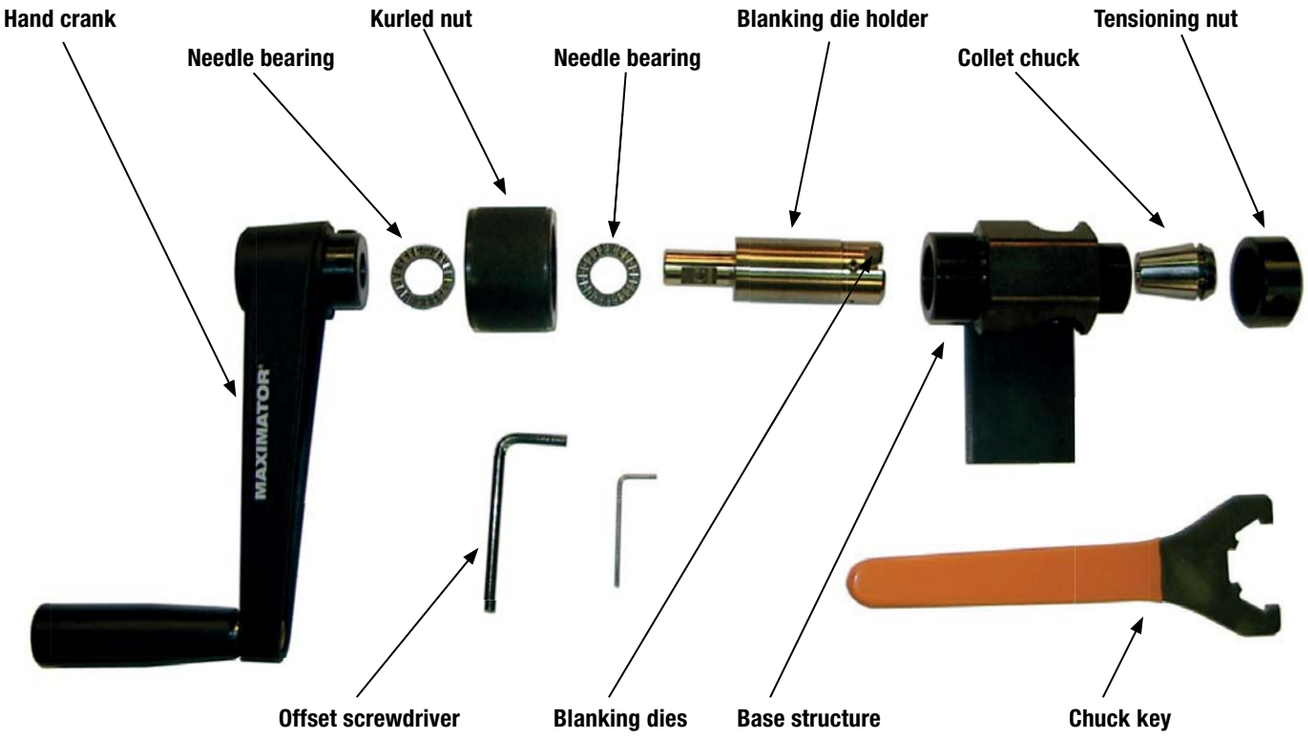

11.2 Single parts and structure of the thread cutting tool

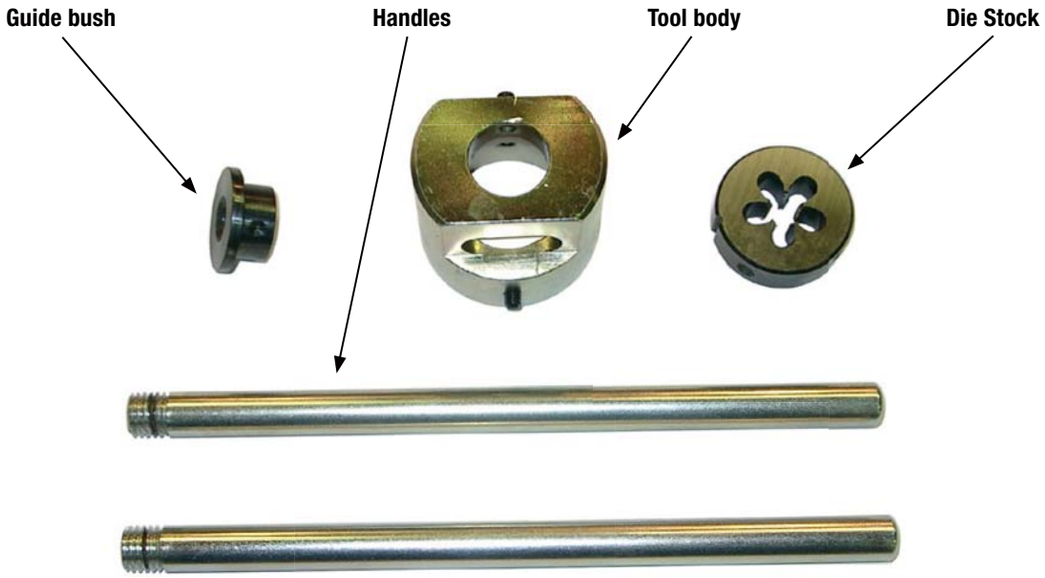

All technical and dimensional information subject to change. All general Terms and Conditions of sale, including limitations of our liability, apply to all products and services sold.

11.3 Preparation of the coning tool

Disassembly

Remove the knurled nut by unscrewing from the base structure.

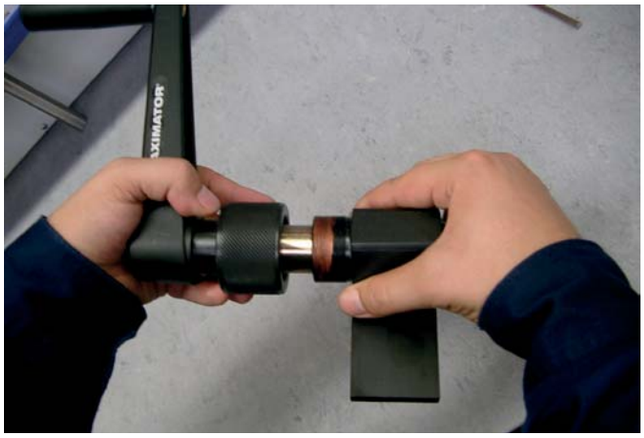

Use the supplied hexagonal offset screwdriver to loosen the headless set screw that keeps the crank handle in its position.

Remove crank handle, knurled nut and needle bearing by pulling from the blanking die holder.

All technical and dimensional information subject to change. All general Terms and Conditions of sale, including limitations of our liability, apply to all products and services sold.

Loosen the 4 headless set screws in the blanking die holder to disassemble the blanking dies. Then remove the blanking from the blanking die holder.

Unscrew the tensioning nut from the base structure. Then push the collet chuck out of the tensioning nut.

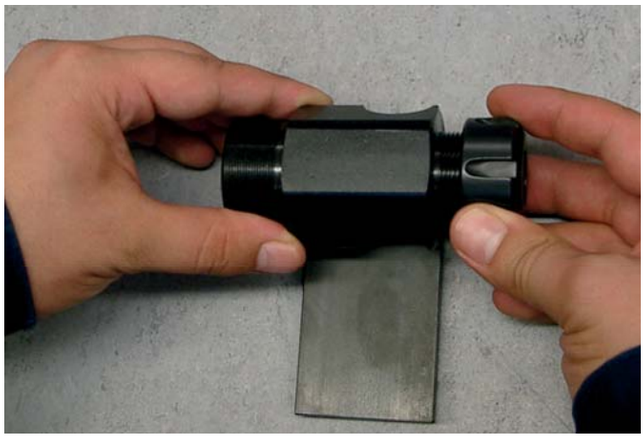

Assembly

Push the collet chuck into the tensioning nut.

All technical and dimensional information subject to change. All general Terms and Conditions of sale, including limitations of our liability, apply to all products and services sold.

Assembly instructions and technical data

» Valves | Fittings | Tubing

Slightly grease tensioning nut and collet chuck and screw them onto the base structure.

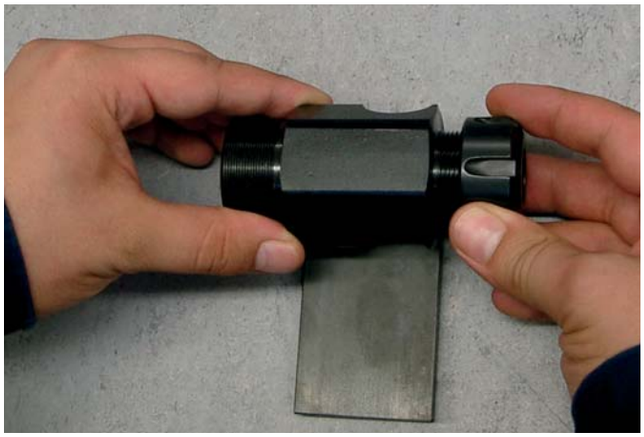

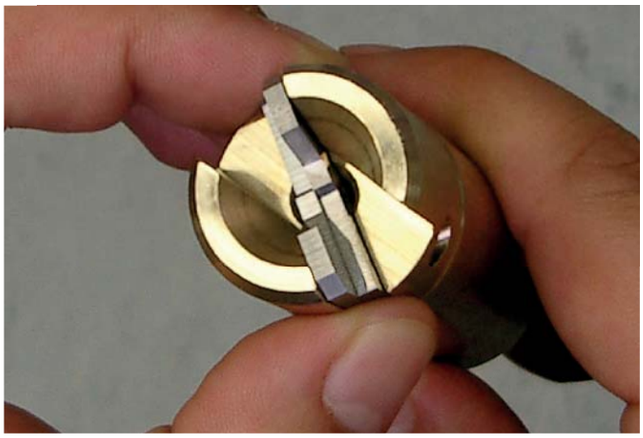

Insert the blanking dies into the blanking die holder as shown in the illustration. Make sure that the labelled order code is always on the outside.

Use the hexagonal offset screwdriver to slightly tighten the headless set screws to align the blanking dies. Make sure to first tighten the headless set screws lo-cated opposite the cutting edges (see se-quence in the illustration). Thus, the blanking dies with cutting edges fit closely to the blanking die holder. Otherwise the processed taper surface may be uneven.

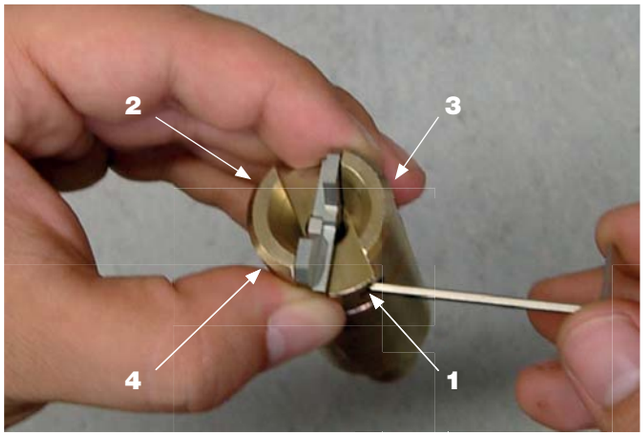

All technical and dimensional information subject to change. All general Terms and Conditions of sale, including limitations of our liability, apply to all products and services sold.

Lubricate the needle bearings with roller bearing grease.

Stick the components onto the blanking die holder in the following sequence: Needle bearing -> Knurled nut -> Needle bearing -> Crank handle

Align the crank handle and blanking die holder in such a manner that the head-less set screw of the crank handle pushes onto the key area at the shaft of the blanking die holder.

Press the components together by hand and tighten the headless set screw.

Avoid any tangible longitudinal play between crank handle, needle bearings, knurled nut and blanking die holder. A clearance between the components may result in an uneven taper surface.

All technical and dimensional information subject to change. All general Terms and Conditions of sale, including limitations of our liability, apply to all products and services sold.

Assembly instructions and technical data

» Valves | Fittings | Tubing

Lubricate the threads of knurled nut and base structures (We recommend use of solid lubricant. such as copper paste).

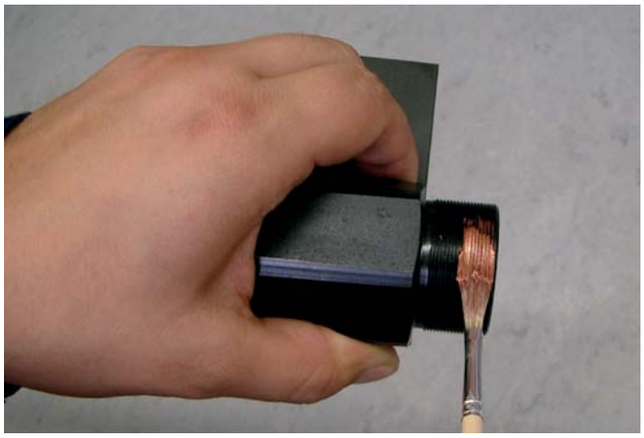

Lubricate the running surface of the blanking die holder.

Insert the blanking die holder into the base structure and screw the knurled nut on with a few rotations. Now the coning tool is ready for use.

All technical and dimensional information subject to change. All general Terms and Conditions of sale, including limitations of our liability, apply to all products and services sold.

11.4 Cutting pipework to length

The pipe length is the result of the clear distance of the components to be connected plus the allowance for each connection as shown in Table 2.

For processing the face sides, add another 0.5 mm for each end.
Pipe length = Distance + 2 x allowance + 2 x 0.5 mm

Cut the pipe to the desired length and deburr on the outside so that it can be inserted into the collet chuck of the ta-pering tool.

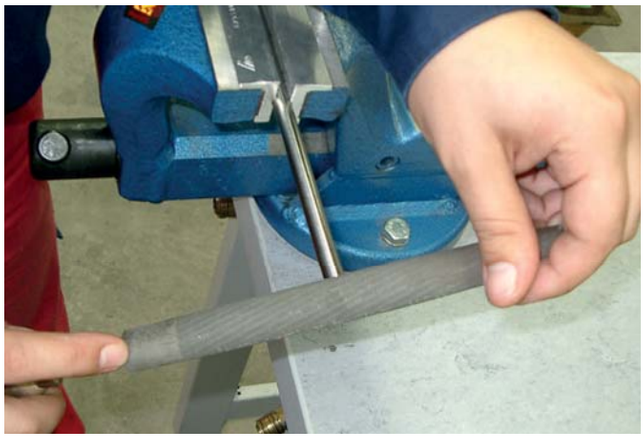

11.5 Cut the cone

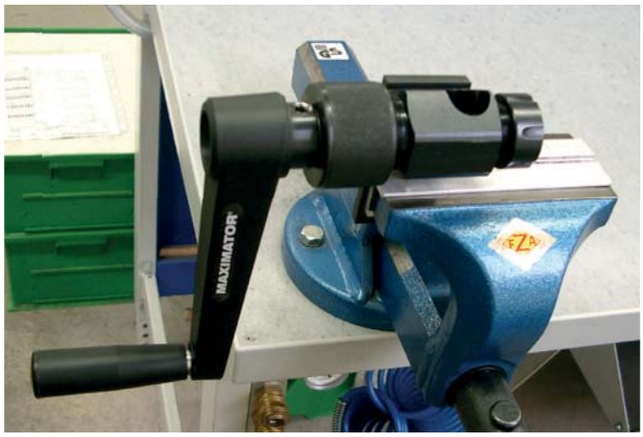

Clamp the coning tool on the fixing plate in a vice or similar.

All technical and dimensional information subject to change. All general Terms and Conditions of sale, including limitations of our liability, apply to all products and services sold.

Assembly instructions and technical data

» Valves | Fittings | Tubing

Turn out the knurled screw until only approx. 2 – 3 thread turns are gripping. This corresponds to a distance of 20 mm between knurled nut and the step of the base structures.

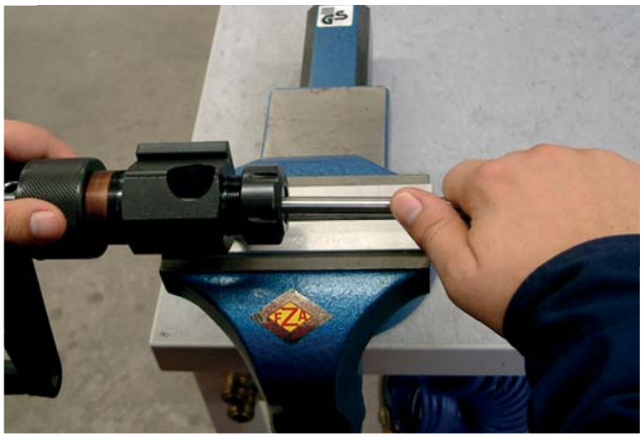

Insert the pipe into the collet chuck. Push forward till to the cheek and pull backward for approx.1 mm

Tighten the tensioning nut with the chuck key. Make sure that all 4 springs of the chuck keys are gripping the tensioning nut slots.

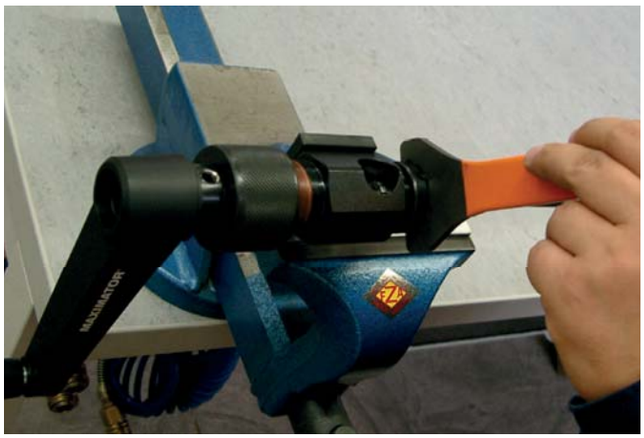

All technical and dimensional information subject to change. All general Terms and Conditions of sale, including limitations of our liability, apply to all products and services sold.

3999.1831 | 04/2017

Apply cutting oil onto the blanking dies and pipe end through the side opening in the base structure. Repeat several times during the cutting operation.

Turn the crank handle in clockwise di-rection and simultaneously provide a slow advance with the knurled nut. Advancing without simultaneous „cranking“ can destroy the blanking dies. To ensure that the taper is completely cut the rotations of the knurled nut can be counted or the advance measured. The number of required rotations corresponds to the necessary advance in mm and can be gathered from the Table: Assembly instructions cone processing (see point 11.8). When ending the cutting operation and in order to obtain a smooth surface turn the crank handle evenly and continuously and reduce the advance speed with the knurled nut. Then stop the advance and continuously perform 3-4 rotations of the crank without moving the knurled nut. Slowly turn back the knurled nut. Thus, an in-dentation of the blanking on the taper is avoided.

Use the chuck key to loosen the tensioning nut and the tube can be re-moved from the coning tool.

All technical and dimensional information subject to change. All general Terms and Conditions of sale, including limitations of our liability, apply to all products and services sold.

The finished pipe can be recognised by the completely machined face side of the pipe. The taper surface must be free from any damage, such as indentations or scratches. If this is not the case, the pipe can simply be re-cut.

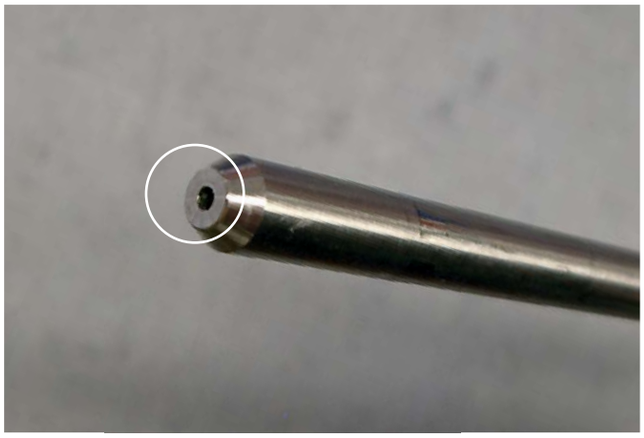

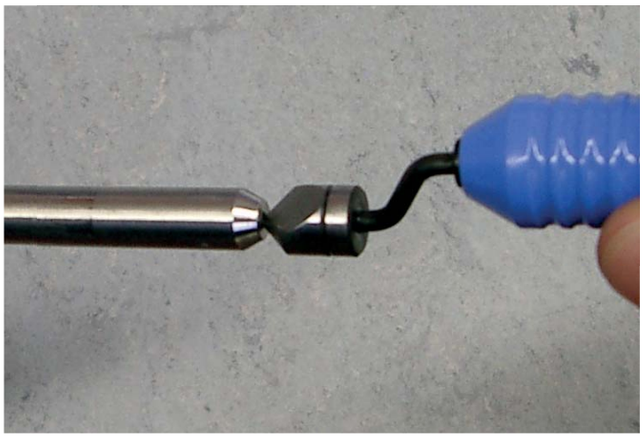

The only work left to do now is debur-ring of the internal diameter of the finished pipe. Carefully remove all chips that are generated by taper cutting edges and deburring (inside and out-side).

11.6 Preparation of the threading tool

Screw the handles into the tool body.

All technical and dimensional information subject to change. All general Terms and Conditions of sale, including limitations of our liability, apply to all products and services sold.

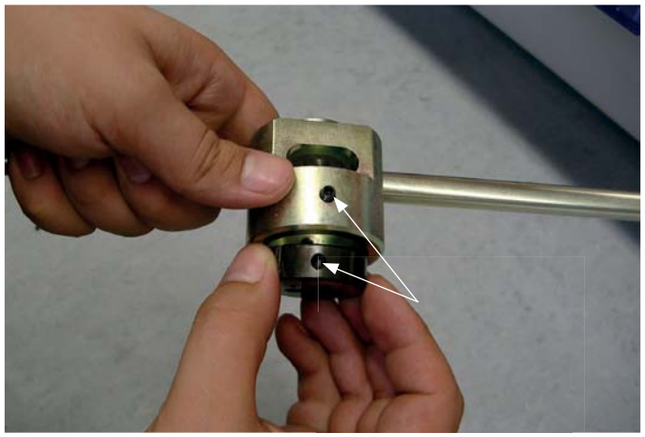

Insert the die stock and guide bush into the tool body and secure with headless set screws. Align the components in such a manner that the headless set screws grip into the recesses.

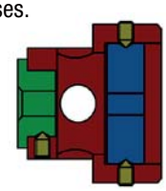

11.7 Threading

Clamp the high-pressure tube with the finished cones. We recommend protective jaws made of aluminium.

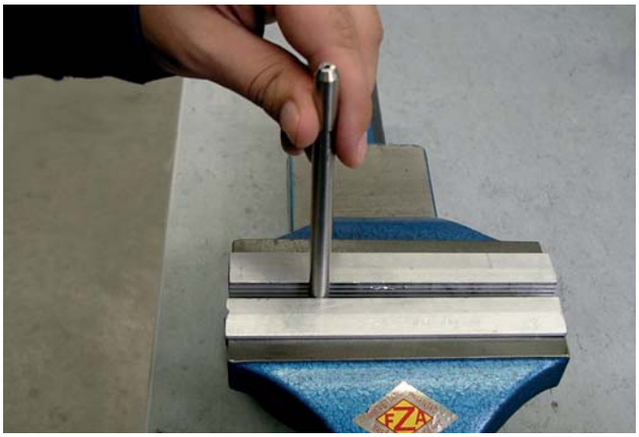

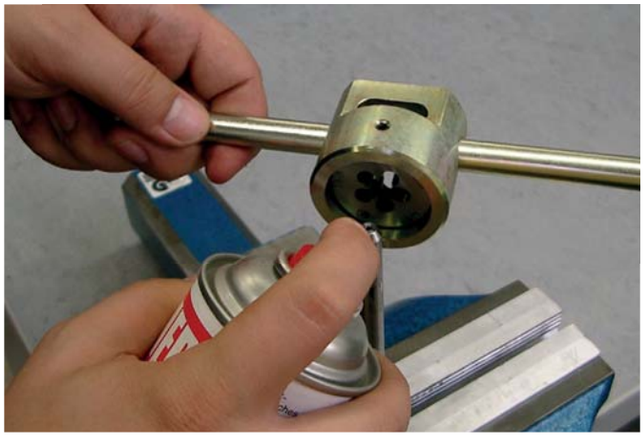

Wet the pipe and the die with cutting oil.

All technical and dimensional information subject to change. All general Terms and Conditions of sale, including limitations of our liability, apply to all products and services sold.

Assembly instructions and technical data

» Valves | Fittings | Tubing

Place the threading tool with guide bush on top of the tube.

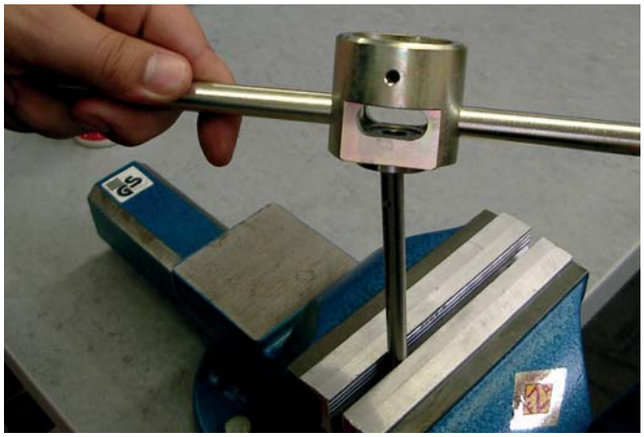

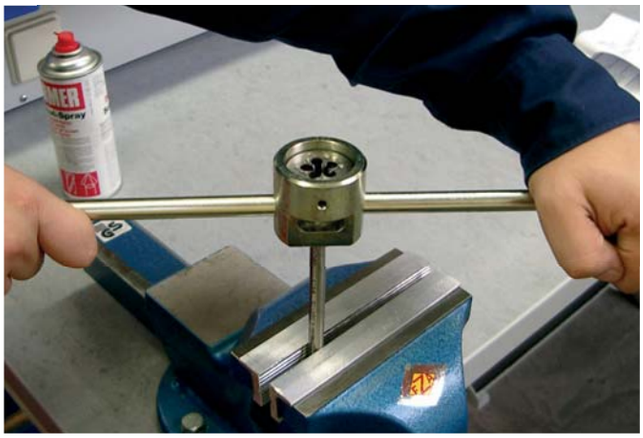

Slightly press down the tool and start the threading operation (in counter-clockwise direction). Rotate the tool briefly in clockwise direction during the threading process in order to break the chip and apply more cutting oil.

See Table 7 (Point 11.8) for the length of the thread. Chips created when cut-ting the thread must be removed carefully (inside and outside).

All technical and dimensional information subject to change. All general Terms and Conditions of sale, including limitations of our liability, apply to all products and services sold.

11.8 Technical parameters

Connection	Ø A (mm)	Ø I (mm)	Ø B (mm)	L (mm)	UNF left-handed thread
4M	6.35	2.77	3.6	9	1/4-28-LH
4H	6.35	2.11	3.2	14	1/4-28-LH
4U	6.35	1.59	3.2	14	1/4-28-LH
6M	9.53	5.16	6.4	11	3/8-24-LH
6H/6U	9.53	3.18	5.6	19	3/8-24-LH
6U	9.53	1.59	5.6	19	3/8-24-LH
9M	14.29	7.93	10.3	13	9/16-18-LH
9H/9U	14.29	4.78	7.1	24	9/16-18-LH
5U	7.94	1.57	3.2	17	5/16-24-LH
12M	19.05	11.13	14.27	15.88	3/4-16-LH
16M	25.4	14.27	18.26	19.84	1-14-LH

Table: Pipe end dimensions

Connection	Tube dimensions		Advance (mm)	Allowance
	Ø A (mm)	Ø I (mm)	Rotations**	(mm)*
4M	6.35	2.77	3	14
4H/4U	6.35	2.11	4	13
6M	9.53	5.16	4	18
6H/6U	9.53	3.18	5	18
9M	14.29	7.93	7	21
9H/9U	14.29	4.78	9	22
5U	7.94	1.58	5	32

*Allowance for inserting the tube into the connecting part.
**Number of turns required for cutting the cone.

Table: Assembly instructions cone processing

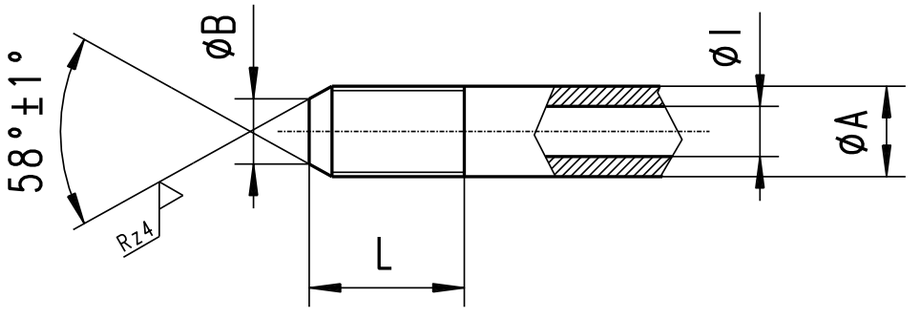

12. Disposal

MAXIMATOR valves, fittings and tubing must be disposed of according to the national regulations at the end of their service life.

All technical and dimensional information subject to change. All general Terms and Conditions of sale, including limitations of our liability, apply to all products and services sold.

13 Attachment

13.1 Torque Values

Tubing Size O.D. x I.D. in. (mm)	Tubing Pressure psi (bar) @ R.T.	Connection Type	Tube Gland Hex Size in. (mm)	Required Torque ft-lbs. (Nm)
1/4 x .109 **(6.35 x 2.77)**	22,500 **(1,550)**	4M	1/2 **(12.7)**	20 **(28)**
3/8 x .203 **(9.53 x 5.17)**	22,500 **(1,550)**	6M	5/8 **(15.9)**	30 **(41)**
9/16 x .312 **(14.29 x 7.93)**	22,500 **(1,550)**	9M	15/16 **(23.8)**	55 **(75)**
9/16 x .359 **(14.29 x 9.13)**	15,200 **(1,050)**	9M	15/16 **(23.8)**	55 **(75)**
3/4 x .438 **(19.05 x 11.12)**	22,500 **(1,550)**	12M	1-3/16 **(30.2)**	90 **(122)**
3/4 x .516 **(19.05 x 13.1)**	15,200 **(1,050)**	12M	1-3/16 **(30.2)**	90 **(122)**
1 x .562 **(25.4 x 14.27)**	22,500 **(1,550)**	16M	1-3/8 **(34.9)**	150 **(204)**
1 x .688 **(25.4 x 17.47)**	15,200 **(1,050)**	16M	1-3/8 **(34.9)**	150 **(204)**
1/4 x .083 **(6.35 x 2.11)**	65,000 **(4,500)**	4H	5/8 **(15.9)**	25 **(34)**
3/8 x .125 **(9.53 x 3.17)**	65,000 **(4,500)**	6H	13/16 **(20.6)**	50 **(68)**
9/16 x .188 **(14.29 x 4.77)**	65,000 **(4,500)**	9H	1-3/16 **(30.2)**	110 **(150)**
1 x .438 **(25.4 x 11.13)**	43,000 **(2,965)**	16M	1-3/8 **(34.9)**	150 **(204)**
1/4 x .063 **(6.35 x 1.59)**	101,000 **(7,000)**	4U	5/8 **(15.9)**	25 **(34)**
3/8 x .125 **(9.53 x 3.17)**	101,000 **(7,000)**	6U	13/16 **(20.6)**	50 **(68)**
9/16 x .188 **(14.29 x 4.77)**	101,000 **(7,000)**	9U	1-3/16 **(30.2)**	110 **(150)**
5/16 x .062 **(7.94 x 1.58)**	152,000 **(10,500)**	5U	3/4 **(19.05)**	70 **(95)**

All dimensions are for references only and are subject to change.

13.2 Anti-Vibration Torque Values

Tubing Size O.D. x I.D. in. (mm)	Tubing Pressure psi (bar) @ R.T.	Connection Type	Tube Gland Hex Size in. (mm)	Required Torque ft-lbs. (Nm)
1/4 x .109 **(6.35 x 2.77)**	22,500 **(1,550)**	4M	5/8 **(15.9)**	15 **(21)**
3/8 x .203 **(9.53 x 5.17)**	22,500 **(1,550)**	6M	13/16 **(20.6)**	20 **(28)**
9/16 x .312 **(14.29 x 7.93)**	22,500 **(1,550)**	9M	15/16 **(23.8)**	35 **(48)**
9/16 x .359 **(14.29 x 9.13)**	15,200 **(1,050)**	9M	15/16 **(23.8)**	35 **(48)**
3/4 x .438 **(19.05 x 11.12)**	22,500 **(1,550)**	12M	5/4 **(31.8)**	60 **(82)**
3/4 x .516 **(19.05 x 13.1)**	15,200 **(1,050)**	12M	5/4 **(31.8)**	60 **(82)**
1 x .562 **(25.4 x 14.27)**	22,500 **(1,550)**	16M	1 1/4 **(38.1)**	100 **(136)**
1 x .688 **(25.4 x 17.47)**	15,200 **(1,050)**	16M	1 1/4 **(38.1)**	100 **(136)**
1/4 x .083 **(6.35 x 2.11)**	65,000 **(4,500)**	4H	5/8 **(15.9)**	20 **(28)**
3/8 x .125 **(9.53 x 3.17)**	65,000 **(4,500)**	6H	13/16 **(20.6)**	30 **(41)**
9/16 x .188 **(14.29 x 4.77)**	65,000 **(4,500)**	9H	1-3/16 **(30.2)**	60 **(82)**
1 x .438 **(25.4 x 11.13)**	43,000 **(2,965)**	16M	1 1/4 **(38.1)**	100 **(136)**

All dimensions are for references only and are subject to change.

All technical and dimensional information subject to change. All general Terms and Conditions of sale, including limitations of our liability, apply to all products and services sold.

13.3 Needle Valve Torque Values

Valve Series	Tubing Size in. (mm)	Packing Gland Hex in. (mm) Size	Packing Gland Torque ft.-lbs. (Nm)	Running Torque in.-lbs. (Nm)	Seating Torque in.-lbs. (Nm)
Pipe 15,200 psig @RT 15V Medium Pressure 22,500 psig @ RT 21V	1/4 **(6.35)**	5/8 **(15.9)**	30 **(41)**	40 **(4.5)**	55 **(6.2)**
	3/8 **(9.53)**	5/8 **(15.9)**	30 **(41)**	40 **(4.5)**	55 **(6.2)**
	9/16 **(14.29)**	13/16 **(20.6)**	60 **(82)**	46 **(6.8)**	90 **(10.2)**
	3/4 **(19.05)**	15/16 **(23.8)**	3/4 turn	300 **(33.9)**	360 **(40.7)**
	1 **(25.4)**	1-3/8 **(34.9)**	3/4 turn	360 **(40.7)**	600 **(67.8)**
High Pressure 36,000 psig @ RT 36V	1/4 **(6.35)**	13/16 **(20.6)**	45 **(61)**	50 **(5.6)**	60 **(6.8)**
	3/8 **(9.53)**				
	9/16 **(14.29)**				
High Pressure 43,000 psig @ RT 43V	1 **(25.4)**	1-3/8 **(34.9)**	3/4 turn	360 **(40.7)**	600 **(67.8)**
High Pressure 65,000 psig @ RT 65V	1/4 **(6.35)**	13/16 **(20.6)**	35 **(48)**	65 **(7.3)**	75 **(8.5)**
	3/8 **(9.53)**				
	9/16 **(14.29)**				
Ultra High Pressure 101,000 psig @ RT 101V	1/4 **(6.35)**	13/16 **(20.6)**	40 **(55)**	65 **(7.3)**	75 **(8.5)**
	3/8 **(9.53)**				
	9/16 **(14.29)**				
	5/16 **(7.94)**	15/16 **(23.8)**	60 **(82)**	100 **(11.3)**	120 **(13.6)**

All dimensions are for references only and are subject to change.

13.4 Recommended Bend Radius for 316SS Tubing

Tubing Size O.D. x I.D. in. (mm)	Tubing Pressure psi (bar) @ R.T.	Recommended Minimum Bend Radius in. (mm)
1/4 x .109 **(6.35 x 2.77)**	22,500 **(1,550)**	1.25 **(31.8)**
3/8 x .203 **(9.53 x 5.17)**	22,500 **(1,550)**	1.75 **(44.5)**
9/16 x .312 **(14.29 x 7.93)**	22,500 **(1,550)**	2.63 **(66.8)**
9/16 x .359 **(14.29 x 9.13)**	15,200 **(1,050)**	2.63 **(66.8)**
3/4 x .438 **(19.05 x 11.12)**	22,500 **(1,550)**	3.50 **(88.9)**
3/4 x .516 **(19.05 x 13.1)**	15,200 **(1,050)**	3.50 **(88.9)**
1 x .562 **(25.4 x 14.27)**	22,500 **(1,550)**	4.63 **(117.6)**
1 x .688 **(25.4 x 17.47)**	15,200 **(1,050)**	4.63 **(117.6)**
1/4 x .083 **(6.35 x 2.11)**	65,000 **(4,500)**	1.25 **(31.8)**
3/8 x .125 **(9.53 x 3.17)**	65,000 **(4,500)**	1.75 **(44.5)**
9/16 x .188 **(14.29 x 4.77)**	65,000 **(4,500)**	2.63 **(66.8)**
1 x .438 **(25.4 x 11.13)**	43,000 **(2,965)**	4.63 **(117.6)**
5/16 x .062 **(7.94 x 1.58)**	152,000 **(10,500)**	6.00 **(152.4)**

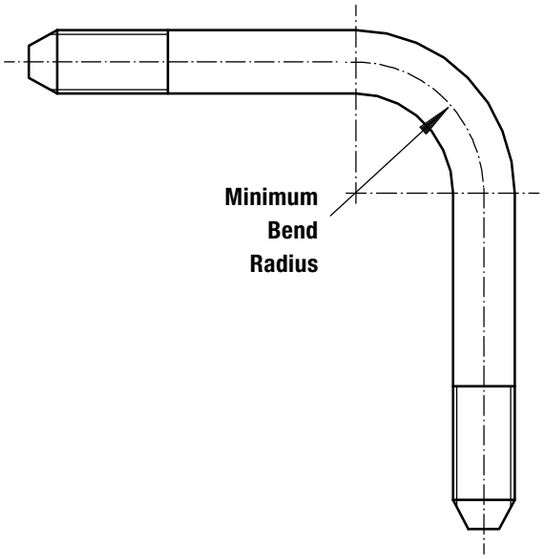

All dimensions are for references only and are subject to change.
All technical and dimensional information subject to change. All general Terms and Conditions of sale, including limitations of our liability, apply to all products and services sold.

13.5 Tube Connection Details

Male Connection

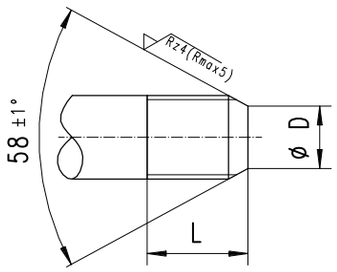

Female Connection

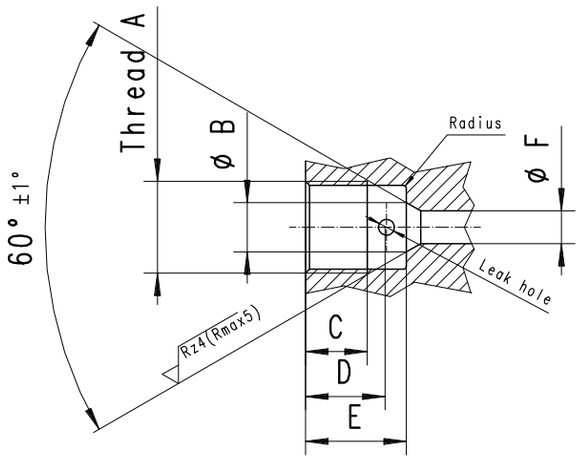

Tubing Size O.D. x I.D in. (mm)	Tubing Pressure psi (bar) @ R.T	Dimension in. (mm) D	L	Left Hand Thread**	Male Conn. Type	Female Conn. Type	Dimension in. (mm) A**	B (±0.1)	C	D	E	F*	Tubing Engagement Allowance
Medium Pressure													
1/4 x .109 **(6.35 x 2.77)**	22,500 **(1,550)**	0.141 **(3.6)**	0.344 **(8.7)**	1/4-28	4M	4M	7/16-20	0.19 **(4.7)**	0.28 **(7)**	0.37 **(9.5)**	0.51 **(13)**	0.109 **(2.7)**	0.55 **(14)**
3/8 x .203 **(9.53 x 5.17)**	22,500 **(1,550)**	0.250 **(6.4)**	0.438 **(11.1)**	3/8-24	6M	6M	9/16-18	0.31 **(7.7)**	0.38 **(9.6)**	0.50 **(12.7)**	0.62 **(15.7)**	0.203 **(5.1)**	0.69 **(17.5)**
9/16 x .312 **(14.29 x 7.93)**	22,500 **(1,550)**	0.406 **(10.3)**	0.500 **(12.7)**	9/16-18	9M	9M	13/16-16	0.50 **(12.7)**	0.44 **(11.2)**	0.59 **(15.1)**	0.75 **(19.1)**	0.312 **(7.8)**	0.84 **(21.3)**
9/16 x .359 **(14.29 x 9.13)**	15,200 **(1,050)**	0.438 **(11.1)**	0.500 **(12.7)**	9/16-18								0.359 **(9.1)**	0.83 **(21.1)**
3/4 x .438 **(19.05 x 11.12)**	22,500 **(1,550)**	0.562 **(14.3)**	0.625 **(15.9)**	3/4-16	12M	12M	3/4-14NPS	0.62 **(15.7)**	0.50 **(12.7)**	0.72 **(18.3)**	0.94 **(23.9)**	0.438 **(11.1)**	1.00 **(25.4)**
3/4 x .516 **(19.05 x 13.1)**	15,200 **(1,050)**	0.578 **(14.7)**	0.625 **(15.9)**	3/4-16								0.516 **(13.1)**	0.99 **(25.1)**
1 x .562 **(25.4 x 14.27)**	22,500 **(1,550)**	0.719 **(18.3)**	0.781 **(19.8)**	1-14	16M	16M	1-3/8-12	0.88 **(22.4)**	0.81 **(20.6)**	1.06 **(27)**	1.31 **(33.3)**	0.562 **(14.3)**	1.44 **(36.6)**
1 x .688 **(25.4 x 17.47)**	15,200 **(1,050)**	0.812 **(20.6)**	0.781 **(19.8)**	1-14								0.688 **(17.5)**	1.38 **(35.1)**

* Port diameters may vary depending on specific valve or fitting component type. See actual component catalog page for orifice sizes and pressure ratings.
** Unified National Fine thread, Class 2.

All technical and dimensional information subject to change. All general Terms and Conditions of sale, including limitations of our liability, apply to all products and services sold.

Tubing Size O.D. x I.D in. (mm)	Tubing Pressure psi (bar) @ R.T	Dimension in. (mm) D	L	Left Hand Thread**	Male Conn. Type	Female Conn. Type	Dimension in. (mm) A**	B (±0.1)	C	D	E	F*	Tubing Engagement Allowance
High Pressure													
1/4 x .083 **(6.35 x 2.11)**	65,000 **(4,500)**	0.125 **(3.2)**	0.562 **(14.3)**	1/4-28	4H	4H	9/16-18	0.17 **(4.2)**	0.39 **(10)**	0.39 **(10)**	0.45 **(11.5)**	0.094 **(2.3)**	0.50 **(12.7)**
3/8 x .125 **(9.53 x 3.17)**	65,000 **(4,500)**	0.219 **(5.6)**	0.750 **(19.1)**	3/8-24	6H	6H	3/4-16	0.26 **(6.5)**	0.53 **(13.5)**	0.53 **(13.5)**	0.63 **(16)**	0.125 **(3.2)**	0.69 **(17.5)**
9/16 x .188 **(14.29 x 4.77)**	65,000 **(4,500)**	0.281 **(7.1)**	0.938 **(23.8)**	9/16-18	9H	9H	1-1/8-12	0.38 **(9.7)**	0.62 **(15.7)**	0.62 **(15.7)**	0.75 **(19.1)**	0.188 **(4.8)**	0.84 **(21.3))**
1 x .438 **(25.4 x 11.13)**	43,000 **(2,965)**	0.563 **(14.3)**	1.083 **(27.5)**	1-14	16M	16M	1-3/8-12	0.88 **(22.4)**	0.81 **(20.6)**	1.06 **(27)**	1.31 **(33.3)**	0.438 **(11.1)**	1.59 **(40.3)**
Ultra High Pressure													
1/4 x .063 **(6.35 x 1.59)**	101,000 **(7,000)**	0.125 **(3.2)**	0.562 **(14.3)**	1/4-28	4U	4U	9/16-18	0.17 **(4.2)**	0.39 **(10)**	0.39 **(10)**	0.45 **(11.5)**	0.094 **(2.3)**	0.50 **(12.7)**
3/8 x .125 **(9.53 x 3.17)**	101,000 **(7,000)**	0.219 **(5.6)**	0.750 **(19.1)**	3/8-24	6U	6U	3/4-16	0.26 **(6.5)**	0.53 **(13.5)**	0.53 **(13.5)**	0.63 **(16)**	0.118 **(3)**	0.69 **(17.5)**
9/16 x .188 **(14.29 x 4.77)**	101,000 **(7,000)**	0.281 **(7.1)**	0.938 **(23.8)**	9/16-18	9U	9U	1-1/8-12	0.38 **(9.7)**	0.62 **(15.7)**	0.62 **(15.7)**	0.75 **(19.1)**	0.188 **(4.8)**	0.84 **(21.3)**
5/16 x 0.62 **(7.95 x 1.58)**	152,000 **(10,500)**	0.125 **(3.2)**	0.687 **(17.4)**	5/16-24	5U	5U	5/8-18	0.25 **(6.2)**	0.63 **(16)**	0.93 **(23.5)**	1.06 **(27)**	0.09 **(2.3)**	1.25 **(31.75)**

* Port diameters may vary depending on specific valve or fitting component type. See actual component catalog page for orifice sizes and pressure ratings.
** Unified National Fine thread, Class 2.

All technical and dimensional information subject to change. All general Terms and Conditions of sale, including limitations of our liability, apply to all products and services sold.

14. Flow Calculations - Example of a high-pressure fluid system design

When designing high-pressure fluid systems, the most important variables are the flow (flow rate), flow speed and pressure loss.

The flow Q is usually determined from the requirements of the application. The flow speed v plays a controlling function in the design and protects the overall system from impermissible statuses.

If the flow speeds are too high in high-pressure pipe systems, this can lead to premature wear of components (in particular the sealing surfaces). Therefore, the limit value for flow speeds when dimensioning pipe systems with gaseous fluids is 10-15 m/s and for fluids 5-7 m/s.

When designing the pressure generator it is important that the pressure loss Δp is taken into account along the entire pipe system. This therefore guarantees that the pipe equipment has no further impact on the respective requirements of the application.

The following is an example design. The application makes the following requirements of the system:

Flow	Q = 0,5 m³/h
Pressure range	p = 1,000 bar
Fluid	Water
Pressure loss	Δp = 2 bar
Density of fluid	ρ = 1 kg/dm³ (at T= 20°C)

The valve design work starts with the dimensioning process. The flow coefficient has proven an important dimensioning ratio. The flow coefficient K_V defines, for all valves, the water flow in m³/h at room temperature of an open valve and simultaneous pressure loss of Δp= 1 bar.

The C_V value is usually used in the USA. (US gallons/min at Δp= 1psi) The following conversion formula is used: **$K_V = 0.86 * C_V$**

The following formula is used to calculate the minimum K_V value of the example application:

$$K_V = Q * \sqrt{\frac{1\ bar}{\Delta p} * \frac{\rho}{1000\ kg/m^3}}$$

As the medium used is water, the last term under the root is omitted. Therefore:

$$K_V = Q * \sqrt{\frac{1\ bar}{\Delta p}}$$

$$K_V = 0{,}5\ m^3/h * \sqrt{\frac{1\ bar}{2\ bar}} = 0{,}35\ m^3/h$$

Conversion of K_V in C_V:

$$C_V = \frac{K_V}{0{,}86} = 0{,}4\ m^3/h$$

The selected valve should therefore not undercut a K_V value of 0.35 m³/h. Please note here that most stated flow coefficients K_V refer to straight-way valves. The flow coefficients for angled valves may be increased by up to 50%.

In this case, a 3/8“ valve of the Medium Pressure Series offers a K_V value of 0.64 (C_V = 0.75). The matching valve is **21V6M071**.

Usually the pipe size (inner diameter) is also specified together with the valve dimensions based on the flow coefficient. However, we recommend checking this paying special attention to the flow speed.

The following formula is used to determine the minimum require inner pipe diameter ID:

$$ID = \sqrt{\frac{Q}{3600 * v} * \frac{4}{\pi}}$$

$$ID = \sqrt{\frac{0{,}5\ m^3/h}{3600 * 7\ m/s} * \frac{4}{\pi}} = 5{,}03\ mm$$

According to the calculation for the example application, a pipe with an inner diameter of at least 5.03 mm must be selected.

The 3/8“ high-pressure pipe and its inner diameter of 5.17 mm satisfies the requirements and therefore confirms the dimensions of the valve.

All technical and dimensional information subject to change. All general Terms and Conditions of sale, including limitations of our liability, apply to all products and services sold.

15 Conversation Tables

Temperature Equivalents

Celisius [°C]	Kelvin [K]	Fahrenheit [°F]	Rankine [°R]
0	273	32	492
-273	0	-460	0
-18	255	0	460

Linear Equivalents

meter [m]	centimeter [cm]	millimeter [mm]	foot [ft]	inch [in]
1	100	1000	3.28083	39.37
0.01	1	10	0.03281	0.3937
0.001	0.1	1	0.003281	0.03937
0.3048	30.48	304.8	1	12
0.0254	2.54	25.4	0.0833	1

Pressure Equivalents

Pascal [Pa]	MPascal [MPa]	Bar [bar]	[psi]	kg/cm²
1	$1x10^{-6}$	$1x10^{-5}$	$1.4504x10^{-4}$	$1.0197x10^{-5}$
$1x10^{-6}$	1	10	145.04	10.1971
100000	0.1	1	14.504	1.01971
6894.757	$6.8948x10^{-3}$	0.06895	1	0.07031
98066.5	0.098067	0.98067	14.223	1

Volume Equivalents

meter³ [m³]	liter [l]	foot³ [ft³]	inch³ [in³]	gallon*
1	1000	35.31	61023	264.2
$1x10^{-3}$	1	0.3531	61.023	0.2642
$28.317x10^{-3}$	28.317	1	1728	7.4822
$1.638x10^{-5}$	0.1639	$5.787x10^{-4}$	1	$43.29x10^{-4}$
$3.785x10^{-3}$	3.785	0.1337	231	1

* U.S. Gallons: U.S. gallon = 0.833 British Imperial gallon; British Imperial gallon = 1.201 U.S. gallon

Density Equivalents

kg/m³	g/cm³	pound/ft³	pound/in³	pound/gallon*
1	0.001	0.062427	$3.613x10^{-5}$	0.008345
1000	1	62.427	0.03613	8.3454
16.018	0.016018	1	$5.787x10^{-4}$	0.13368
27679.9	27.6799	1728	1	231
119.826	0.11983	7.4805	$4.33x10^{-3}$	1

All technical and dimensional information subject to change. All general Terms and Conditions of sale, including limitations of our liability, apply to all products and services sold.

Fluid Flow Equivalents

m³/h	m³/min	l/h	l/min	gallon*/h	gallon*/min
1	0.01667	1000	16.667	264.172	4.4029
60	1	60000	1000	15850.3	264.17
0.001	1.667×10^{-5}	1	0.01667	0.26417	4.4029×10^{-3}
0.06	0.001	60	1	15.85	0.26417
3.7854×10^{-3}	6.309×10^{-5}	3.7854	0.06309	1	0.01667
0.2271	3.7854×10^{-3}	227.1247	3.7854	60	1

Area Equivalents

m²	cm²	mm²	ft²	in²
1	1×10^{4}	1×10^{6}	10.7639	1550
1×10^{-4}	1	100	1.0764×10^{-3}	0.155
1×10^{-6}	0.01	1	1.0764×10^{-5}	1.55×10^{-3}
0.0929	929.03	92903.04	1	144
6.4516×10^{-4}	6.4516	645.1625	6.944×10^{-3}	1

Velocity Equivalents

km/h	m/min	m/s	fpm	fps
1	16.667	0.2778	54.6807	0.9113
0.06	1	0.01667	3.2808	0.05468
3.6	60	1	196.85	3.2808
1.829×10^{-2}	0.3048	0.00508	1	0.01667
1.09728	18.288	0.3048	60	1

All technical and dimensional information subject to change. All general Terms and Conditions of sale, including limitations of our liability, apply to all products and services sold.

CERTIFICATE

TIC
TÜV International Certification
TÜV CERT

for the management system according to ISO 9001:2008

The proof of the conforming application with the regulation was furnished and in accordance with certification procedure it is certified for the company

MAXIMATOR®
Maximum Pressure.

MAXIMATOR GmbH
Lange Straße 6
99734 Nordhausen / Germany

Scope

Design, manufacturing and sale of high pressure technics, hydraulics, pneumatics and test technology

Certificate Registration No.: TIC 15 100 4011
Valid until: 2018-09-15
Valid from: 2015-12-10

Audit Report No.: 3330 20WJ Q0
Initial certification: 1994

This certification was conducted in accordance with the TIC auditing and certification procedures and is subject to regular surveillance audits.

TÜV Thüringen e.V.
Certification body for systems and personnel

TÜV THÜRINGEN

Jena, 2015-12-10

IAF
DAkkS Deutsche Akkreditierungsstelle D-ZM-16006-05-01

TIC
Original certificates are branded with a hologram.

The current validity can be demanded at our homepage www.tuev-thueringen.de
Zertifizierungsstelle des TÜV Thüringen e.V. • Ernst-Ruska-Ring 6 • D-07745 Jena • ☎ +49 3641 399740 • ✉ zertifizierung@tuev-thueringen.de

All technical and dimensional information subject to change. All general Terms and Conditions of sale, including limitations of our liability, apply to all products and services sold.

MAXIMATOR®
Maximum Pressure.

EU-Konformitätserklärung
Hiermit erklären wir, dass die Bauart von Ventilen der Baureihen
(10-, 15-, 21-, 22-, 30-, 36-, 43-, 65-, 101-)(-V-, -DBBNV-, -B2-, B3S, B3D-),
Fittingen der Baureihen
(10-, 15-, 21-, 22-, 30-, 36-, 43-, 65-, 101-, 152-)(-A-, -BF-, -F-, -L-, -M-, -SH-, -T-, -TC-, -UF-, -X-),
Filter der Baureihen
(10-, 15-, 21-, 22-, 30-, 36-, 43-, 65-, 101-)((-CF-, -DF-, -AF-) und
Rückschlagventilen der Baureihen
(10-, 15-, 21-, 22-, 30-, 36-, 43-, 65-, 101-)(-BC-, -OC-)
in der gelieferten Ausführung folgenden einschlägigen Bestimmungen entspricht:
EG-Richtlinie Druckgeräte 2014/68/EU
Angewendete harmonisierte Normen und technische Spezifikationen:
AD 2000
Angewendete Konformitätsbewertungsverfahren:
Modul A

Anschrift Hersteller: MAXIMATOR GmbH, Lange Straße 6, 99734 Nordhausen / Deutschland

EC Declaration of Conformity
Herewith, we declare that the type and design of valves type
(10-, 15-, 21-, 22-, 30-, 36-, 43-, 65-, 101-)(-V-, -DBBNV-, -B2-, B3S, B3D-),
fittings type
(10-, 15-, 21-, 22-, 30-, 36-, 43-, 65-, 101-, 152-)(-A-, -BF-, -F-, -L-, -M-, -SH-, -T-, -TC-, -UF-, -X-),
filters type
(10-, 15-, 21-, 22-, 30-, 36-, 43-, 65-, 101-)((-CF-, -DF-, -AF-) and
and check valves type
(10-, 15-, 21-, 22-, 30-, 36-, 43-, 65-, 101-)(-BC-, -OC-)
as supplied are in conformity with the following relevant regulations:
EC Pressure Equipment Directive 2014/68/EU
Harmonised standards and technical specifications applied:
AD 2000
Conformity assessment procedures applied:
Modul A

Name and address of manufacturer: MAXIMATOR GmbH, Lange Straße 6, 99734 Nordhausen / Germany

Déclaration de conformité CE
Nous certifions que le modèle de type de valves
(10-, 15-, 21-, 22-, 30-, 36-, 43-, 65-, 101-)(-V-, -DBBNV-, -B2-, B3S, B3D-),
Type de garnitures
(10-, 15-, 21-, 22-, 30-, 36-, 43-, 65-, 101-, 152-)(-A-, -BF-, -F-, -L-, -M-, -SH-, -T-, -TC-, -UF-, -X-),
Type de Filtres
(10-, 15-, 21-, 22-, 30-, 36-, 43-, 65-, 101-)((-CF-, -DF-, -AF-)
et type clapet de non retour
(10-, 15-, 21-, 22-, 30-, 36-, 43-, 65-, 101-)(-BC-, -OC-)
est conforme, à sa livraison, aux spécifications applicables suivantes:
Directive CE d'équipment sous pression 2014/68/UE
Normes harmonisées appliquées et préscriptions
techniques:
AD 2000
Procédures d'évaluation de la conformité appliquées:
Modul A

Adresse du fabricant : MAXIMATOR GmbH, Lange Straße 6, 99734 Nordhausen / Allemagne

Nordhausen, den 19.07.2016 (Nordhausen, 19.07.2016) [Nordhausen, le 19.07.2016]

.....
Steffen Roloff (Technischer Leiter) (Technical Director) [Directeur technique]

MAXIMATOR GmbH, Lange Straße 6, 99734 Nordhausen, Telefon +49 (0) 3631 9533–0, Telefax +49 (0) 3631 9533–5010, www.maximator.de, info@maximator.de

All technical and dimensional information subject to change. All general Terms and Conditions of sale, including limitations of our liability, apply to all products and services sold.

MAXIMATOR®
Maximum Pressure.

Statement on
ATEX Directive 2014/34/EC

The scope of the directive 2014/34/EC also includes non-electrical equipment and components to be used in potentially explosive atmospheres which have their own source of ignition.

Maximator manufactured items:

Manual valves with stainless steel handle 15-, 21-, 22-, 30-, 36-, 65-, 101- series,

Fittings of 10-, 15-, 21-, 30-, 36-, 65-, 101-, 152- series,

Filters of 15-, 21-, 30-, 65- series,

Check valves of 15-, 21-, 30-, 65-, 101- series,

Tubing of 15-, 21-, 30-, 36-, 65-, 101- series

Providing it is used as intended none of the items have its own potential source of ignition.

Therefore they do not fall in the scope of the directive 2014/34/EC and can be used in all explosion zones without declaration of conformity.

Nordhausen, 20.04.2016

i. V. Hanke
.....
Peter Hanke (Technical Director)

MAXIMATOR GmbH, Lange Straße 6, 99734 Nordhausen, Telefon +49 (0) 3631 9533 – 0, Telefax +49 (0) 3631 9533 – 5010, www.maximator.de, info@maximator.de

All technical and dimensional information subject to change. All general Terms and Conditions of sale, including limitations of our liability, apply to all products and services sold.

Achilles JQS
empowered by Achilles

Joint Qualification System

for suppliers to the Oil Industry in Norway and Denmark

Certificate of Qualification

Awarded to

MAXIMATOR GMBH

Company Reg.no: HRB 506347

Achilles Id. 60411

Achilles Information Centre hereby confirms that MAXIMATOR GMBH is qualified in the Achilles Joint Qualification System for suppliers to the Oil Industry in Norway and Denmark. The qualification concerns the product and service categories listed in the appendix.

Atle Gjertsen
Achilles Information Centre
Sector Manager, Oil & Gas

Anja Thorsdalen
Achilles Information Centre
Operation Manager

Issued Date:
19-Feb-2016

Expiry Date:
29-Oct-2016

The participating Oil Companies and Main Contractors may use Achilles JQS as the basis for preparation of bidder lists directly or together with additional qualification criteria established by the individual Company. Other qualification stages may be added by the individual Company if more information is found necessary to complete the preparation of bidder lists

All technical and dimensional information subject to change. All general Terms and Conditions of sale, including limitations of our liability, apply to all products and services sold.

3999.1831 I 04/2017

Customized Solutions

MAXIMATOR has been designing and manufacturing high pressure equipment for more than thirty years and has a worldwide reputation for quality and reliability, backed by one of the best service organizations in the industry.

Customized Solutions:

- Gauge Valves
- Bleed Valves
- Block and Bleed Valves
- Thermocouples
- Hydraulic Valve Actuator
- Safety and shut-off manifold
- Sampling Bottle Valves
- Manifold Valves
- Certification, Material Traceability and Custom Test Requirements

Note: When selecting multiple items, the pressure rating would be that of the lowest rated component.

Index	Page:
Gauge Valves	2
Bleed Valves	2
Block and Bleed Valves	2
Thermocouples	3
Hydraulic Valve Actuator	3
Safety and shut-off manifold	3
Sampling Bottle Valves	4
Manifold Valves	4
Certification, Material Traceability and Custom Test Requirements	4

MAXIMATOR GmbH, Lange Straße 6, 99734 Nordhausen, Telefon +49 (0) 3631 9533 – 0, Telefax + 49 (0) 3631 9533 – 5010, www.maximator.de, info@maximator.de

All technical and dimensional information subject to change. All general Terms and Conditions of sale, including limitations of our liability, apply to all products and services sold.

Customized Solutions

Gauge Valves

Maximator gauge valves are mainly used to isolate the instrumentation such as pressure transducers or gauges from the process.

The GV series from MAXIMATOR is rated up to 36,000 psi **(2,500 bar)**. In addition, also a Sour Gas gauge valve series is available up to 22,500 psi **(1,550 bar)**.with 1/4“, 3/8“ and 9/16“ connections.

Bleed Valves

Maximator series BV bleed valves are designed for reliable pressure bleed service up to 36,000 psi **(2,500 bar)***. They have a 1/8” NPT outlet connection and are easy to install due to their one piece hex construction.

In addition, also a Sour Gas bleed valve series is available up to 22,500 psi **(1,550 bar).**

* Rating shown is in closed position. Rating @ 10,000 psi (690 bar) in open position.

Block and Bleed Valves

Maximator series BB block and bleed valves with metal to metal seats have a high level of safety and reliability under adverse operating conditions. Block and bleed valves are two stem manifold valves designed for blocking, bleeding and calibrating of pressure gauges and transmitters up to 22,500 psi **(1,550 bar).**

Due to the mini valve packing and stem design Maximator block and bleed valves are very compact and easy to use. In addition, manifold style valves reduce the number of fittings and space required for installation.

All technical and dimensional information subject to change. All general Terms and Conditions of sale, including limitations of our liability, apply to all products and services sold.

Thermocouples

Maximator high-pressure thermocouples allow a fast and reliable temperature measurement in high pressure systems.
Simple and direct installation of the thermocouplings in standard Maximator connections 1/4, 3/8, 9/16.
Thermocouples are available for pressures up to 4500 bar (65,000 PSI) Temperature rating up to 1,200 °F **(650°C)**

Hydraulic Valve Actuator

Compared to the pneumatic actuator for Maximator high pressure valves, the compact design of the hydraulic actuator and its low weight should be highlighted. The hydraulic actuator for Maximator valves can be used in a variety of applications. In addition to its use in test applications, applications in combination with Maximator hydraulic boosters should be mentioned. The hydraulic actuator can be operated with up to 200 bars and is designed for temperatures from -55 °C to +100 °C.

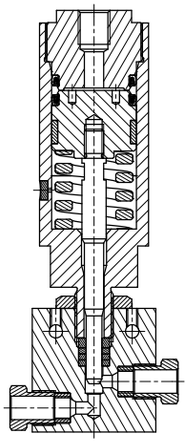

Safety and shut-off manifold

Maximator safety and shut-off manifold are designed for up to 1.050 bar. This safety and shut-off block are designed to be installed on the fluid side of a hydraulic accumulator in the oil and gas industry.

It provides convenient separation of accumulator and system relieves the tank and, thanks to the installed pressure limitation valve, safe-guards the accumulator on the fluid side.
Material: high stregth stainless steel
Pressure limitation valve: up to 1.050 bar, nominal size of 8 mm

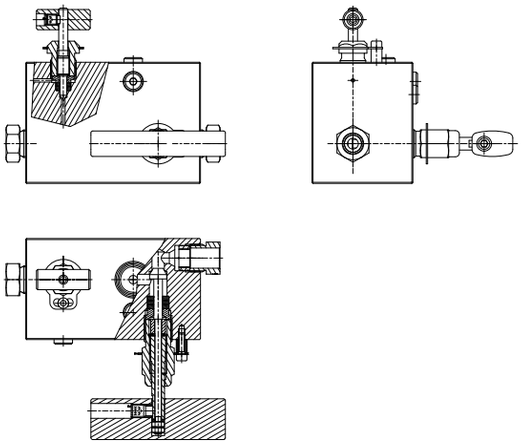

All technical and dimensional information subject to change. All general Terms and Conditions of sale, including limitations of our liability, apply to all products and services sold.

Customized Solutions

Sampling Bottle Valves

Maximator Sampling Bottle valves are 3-Way / 1 on pressure Needle valves.

This series combines the excellent performance, corrosion resistance and great durability of the standard Maximator Neelde Valves with a smart design, to be used on sample bottles and cylinders for remote sampling in the oil industry.

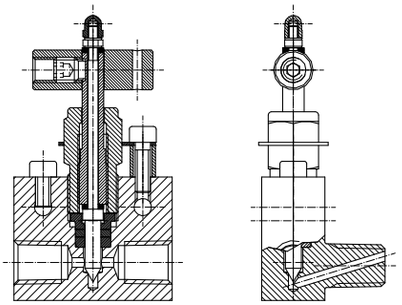

Manifold Valves

Maximator Manifold Valves minimize space requirements and reduce the installation time necessary to assemble a pressure system. In addition, by reducing the number of components used in a system, manifold valves also reduce the number of potential leak joints. Maximator will design and build manifold valves to meet specific installation, layout, and pressure requirements.

These manifold valves are available in a variety of materials and sizes. Among the pressure connections that can be incorporated are Maximator Medium Pressure, High Pressure, Ultra High Pressure as well as NPT, BSP and others. These manifold valves are appropriate wherever pressure tubing systems are utilized.

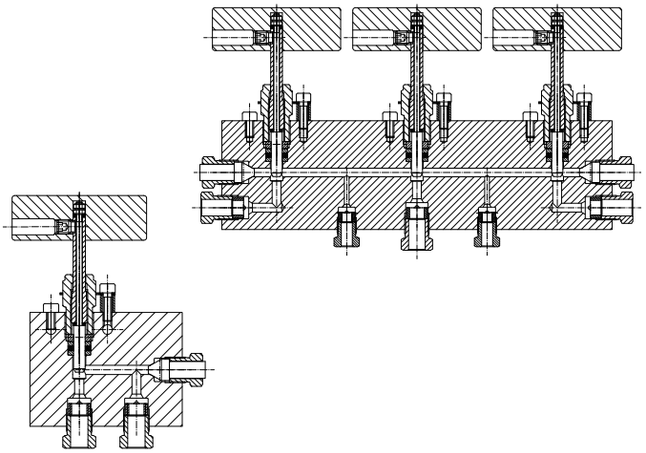

Certification, Material Traceability and Custom Test Requirements

Maximator Valves, Fittings and Tubing are designed in conformity with the EC Pressure Equipment Directive 97/23/EC (PED) Module A and are marked with CE. Other standards, e.g. API or ASME can be applied up on request. Certificates (Declaration of manufacturer, ATEX, etc.) for all Products are readily available.

Maximator also realises a wide number of customizations like special materials (e.g. special alloy with high molybdenum content, nickel-based alloy), Positive Material Identification Tests (PMI), as well as special test requirements.

Because of our customer-focused quality system, Maximator offers a 24/7 online access to its Material Inspection Certificate database* (https://www.maximator.de/Material+inspection+certificate.html).

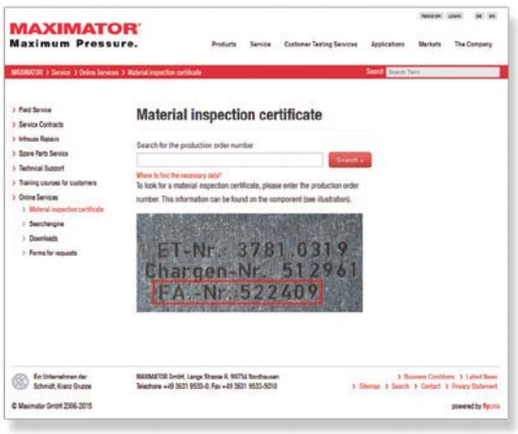

*one-time registration required

All technical and dimensional information subject to change. All general Terms and Conditions of sale, including limitations of our liability, apply to all products and services sold.

Compact Air Actuated Needle Valves

Air actuated Valves are a great option for process automation, pressure control or safety devices in high pressure test and production systems. Maximator developed a special series of compact air actuated needle valves, which offer a high performance but require less than 60% of space in high pressure systems compared with standard air actuated yoke-type needle valves.
All valves of this compact air actuated needle valves series are available as „normaly open“ and „normaly closed“ version and offer a 2 mm orifice. This valves are available for the 15,200 psi **(1.050 bar)** and 22,500 psi **(1.550 bar)** pressure range with various connections. Please consult factory for further information.

Special Check Valve Designs for critical fluids or heavy duty applications

Maximator offers a wide range of check valves, which offer a great performance for most of the common liquid and gas applications in variouse industries.
Especialy for applications, where best of class sealing ability is required, e.g. Hydrogen service, Maximator developed a new cone check valve design with a highly media compatible soft sealing system and improved spring guide. This series is available for Medium Pressure applications up to 22,500 psi **(1.550 bar)** with 4M to 9M connection.
For heavy duty applications Maximator has developed an additional version of their ball check valve with a special ceramic ball. This check valve series is available for 65,000 psi **(4.500 bar)** with 4H connections. Please contact factory for further order information.

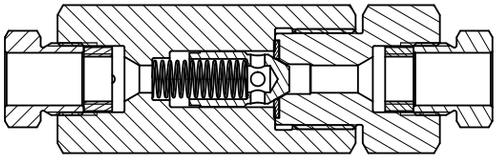

Swivel Joints

Maximator Swivel Joints are special connections which offer a great flexibility to high pressure systems. This kind of joints have been designed for 3D cutting heads of water jet cutting machines. The series of swivel joints is availble as high pressure range up to 65,000 psi (4.500 bar) with 4H or 6H connection and comprises 90° versions with 1 or 2 axis as well as a 180° version with 1 axis.

All technical and dimensional information subject to change. All general Terms and Conditions of sale, including limitations of our liability, apply to all products and services sold.